INCH-POUND
MIL-M-38510/231C
30 August 2005
SUPERSEDING
MIL-M-38510/231B
2 April 1982

MILITARY SPECIFICATION

MICROCIRCUITS, DIGITAL, SCHOTTKY TTL, 1024 BIT RANDOM ACCESS MEMORY (RAM), MONOLITHIC SILICON

Inactive for new design after 24 July 1995

This specification is approved for use by all Departments and Agencies of the Department of Defense.

The requirements for acquiring the product herein shall consist of this specification sheet and MIL-PRF 38535

1. SCOPE

1.1 Scope. This specification covers the detail requirements for monolithic silicon, Schottky TTL, static, 1024 bit random access memory microcircuits. Two product assurance classes and a choice of case outlines/lead finishes are provided for each type and are reflected in the complete part number. For this product, the requirements of MIL-M-38510 have been superseded by MIL-PRF-38535, (see 6.4).

1.2 Part or Identifying Number (PIN). The PIN is in accordance with MIL-PRF-38535, and as specified herein.

1.2.1 Device types. The device types are as follows:

Device type	Circuit	Access times
01	1024X1 bit RAM, uncommitted collector.	60 ns (t_{WHAC} = 5 ns, t_{AVWL} = 15 ns)
02	1024X1 bit RAM, three-state output.	60 ns(t_{WHAC} = 5 ns, t_{AVWL} = 15 ns)
03	1024X1 bit lower power RAM, uncommitted collector	70 ns
04	1024X1 bit lower power RAM, three-state output	70 ns
05	1024X1 bit RAM, uncommitted collector	60 ns (t_{WHAC} = 10 ns, t_{AVWL} = 10 ns)
06	1024X1 bit RAM, three-state output	60 ns (t_{WHAC} = 10 ns, t_{AVWL} = 10 ns)
07	1024X1 bit Schottky RAM, uncommitted collector	45 ns
08	1024X1 bit Schottky RAM, three-state output	45 ns
09	256X4 bit RAM, uncommitted collector	60 ns
10	256X4 bit RAM, three-state output	60 ns
11	256X4 bit low power RAM, uncommitted collector	75 ns
12	256X4 bit low power RAM, three-state output	75 ns
13	1024X1 bit low power RAM, three-state output	50 ns
14	256X4 bit RAM, three-state output	45 ns
15	256X4 bit, low power RAM, three-state output	55 ns

1.2.2 Device class. The device class is the product assurance level as defined in MIL-PRF-38535.

Comments, suggestions, or questions on this document should be addressed to: Commander, Defense Supply Center Columbus, ATTN: DSCC-VAS, P. O. Box 3990, Columbus, OH 43218-3990, or emailed to bipolar@dscc.dla.mil. Since contact information can change, you may want to verify the currency of this address information using the ASSIST Online database at http://assist.daps.dla.mil

1.2.3 Case outlines. The case outlines are as designated in MIL-STD-1835 and as follows:

Outline letter	Descriptive designator	Terminals	Package style
E	GDIP1-T16 or CDIP2-T16	16	Dual-in-line
F	GDFP2-F16 or CDFP3-F16	16	Flat pack
W	GDIP1-T22 or CDIP2-T22	22	Dual-in-line
X 2/	See figure 1	18	Flat pack
Y	CQCC1-N24	24	Square chip carrier
K	GDFP2-F24 or CDFP3-F24	24	Flat pack

1.3 Absolute maximum ratings.

Supply voltage range ..... -0.5 V dc to +7.0 V dc
Input voltage range ..... -0.5 V dc to +5.5 V dc
Storage temperature range ..... -65° to +165°C
Maximum power dissipation (P_D) 1/:
Device types 01, 02, 05, 06, 07, 08, 09, 10, 14 ..... 935 mW
Device types 03, 04, 13 ..... 413 mW
Device types 11, 12, 15 ..... 495 mW
Voltage applied to outputs (output high) ..... -0.5 V to +5.5 V
Output current (output low) ..... +20 mA
Input current ..... -12 mA to +5.0 mA
Lead temperature (soldering, 10 seconds) ..... +300°C
Thermal resistance, junction to case (θ_{JC}):
Cases E, F, W, Y, K..... See MIL-STD-1835
Case X..... 30° C/W
Junction temperature (T_J) ..... 165°C

1.4 Recommended operating conditions.

Supply voltage (V_{CC}) ..... 4.5 V minimum to 5.5 V maximum
Minimum high-level input voltage (V_{IH}) ..... 2.1 V dc
Maximum low-level input voltage (V_{IL}) ..... 0.8 V dc
Case operating temperature range (T_C)..... -55 °C to +125 °C

2. APPLICABLE DOCUMENTS

2.1 General. The documents listed in this section are specified in sections 3, 4, or 5 of this specification. This section does not include documents cited in other sections of this specification or recommended for additional information or as examples. While every effort has been made to ensure the completeness of this list, document users are cautioned that they must meet all specified requirements of documents cited in sections 3, 4, or 5 of this specification, whether or not they are listed.

2.2 Government documents.

2.2.1 Specifications and Standards. The following specifications and standards form a part of this specification to the extent specified herein. Unless otherwise specified, the issues of these documents are those cited in the solicitation or contract.

1/ Must withstand the added P_D due to short circuit test (e.g. I_{OS}).
2/ This package is no longer available, do not use for new design.

DEPARTMENT OF DEFENSE SPECIFICATIONS

MIL-PRF-38535 - Integrated Circuits (Microcircuits) Manufacturing, General Specification for.

DEPARTMENT OF DEFENSE STANDARDS

MIL-STD-883 - Test Method Standard for Microelectronics.
MIL-STD-1835 - Interface Standard Electronic Component Case Outlines

(Copies of these documents are available online at http://assist.daps.dla.mil/quicksearch/ or http://assist.daps.dla.mil or from the Standardization Document Order Desk, 700 Robbins Avenue, Building 4D, Philadelphia, PA 19111-5094.)

2.3 Order of precedence. In the event of a conflict between the text of this specification and the references cited herein, the text of this document takes precedence.

3. REQUIREMENTS

3.1 Qualification. Microcircuits furnished under this specification shall be products that are manufactured by a manufacturer authorized by the qualifying activity for listing on the applicable qualified manufacturers list before contract award (see 4.3 and 6.3).

3.2 Item requirements. The individual item requirements shall be in accordance with MIL-PRF-38535 and as specified herein or as modified in the device manufacturer's Quality Management (QM) plan. The modification in the QM plan shall not affect the form, fit, or function as described herein. This slash sheet has been modified to allow the manufacturer to use the alternate die/fabrication requirements of paragraph A.3.2.2 of MIL-PRF-38535 or other alternative approved by the qualifying activity.

3.3 Design, construction, and physical dimensions. The design, construction, and physical dimensions shall be as specified in MIL-PRF-38535 and herein.

3.3.1 Terminal connections. The terminal connections and logic diagrams shall be as specified on figures 2.

3.3.2 Truth table. The truth tables shall be as specified on figure 3.

3.3.3 Logic diagram. The logic diagram shall be as specified on figure 4.

3.3.4 Functional tests. The functional tests used to test these devices are contained in table III. If the test patterns cannot be implemented due to test equipment limitations, then alternate test patterns to accomplish the same results shall be submitted to the qualifying activity for approval.

3.3.5 Case outlines. The case outlines shall be as specified in 1.2.3.

3.4 Lead material and finish. The lead material and finish shall be in accordance with MIL-PRF-38535 (see 6.6).

3.5 Electrical performance characteristics. The electrical performance characteristics are as specified in table I, and apply over the full recommended case operating temperature range, unless otherwise specified.

3.6 Electrical test requirements. The electrical test requirements for each device class shall be the subgroups specified in table II. The electrical tests for each subgroup are described in table III.

3.7 Marking. Marking shall be in accordance with MIL-PRF-38535.

3.7.1 Certification/compliance mark. The certification mark for device classes Q and V shall be a "QML" or "Q" as required in MIL-PRF-38535. For class Q product built in accordance with A.3.2.2 of MIL-PRF-38535 or other alternative approved by the qualifying activity, the "QD" certification mark shall be used in place of the "QML" or "Q" certification mark.

TABLE I. Electrical performance characteristics.

Test	Symbol	Conditions 1/ -55°C ≤ T_C ≤ +125°C unless otherwise specified		Device Type	Limits Min	Limits Max	Units
High-level output voltage	V_{OH}	V_{CC} = 4.5 V V_{IN} = 2.1 V I_{OH} = -5.2 mA		02, 04, 06, 08, 10, 12, 13, 14, 15	2.4		V
Low-level output voltage	V_{OL}	V_{CC} = 4.5 V V_{IN} = 0.8 V	I_{OL} = 16 mA	01-08, 13		0.45	V
			I_{OL} = 8 mA	09-12, 14, 15			
High level input current	I_{IH1}	V_{CC} = 5.5 V V_{IN} = 5.5 V		All		40	µA
Low level input current	I_{IL}	V_{CC} = 5.5 V V_{IN} = 0.45 V		01-08, 13	-1.0	-400	µA
				09-12, 14, 15	-10.0	-300	
Output leakage	I_{CEX}	V_{CC} = 5.5 V	V_{OH} = 5.5 V	01, 05		100	µA
			V_{OH} = 4.5 V	03, 07, 09, 11			
Output current, short circuit to ground	I_{OS}	V_{CC} = 5.5 V V_{OUT} = GND 2/		02, 04, 06, 08, 13	-20	-100	mA
				10, 12, 14, 15	-10	-70	
High-impedence (off-state) output high current	I_{OHZ}	V_{CC} = 5.5 V	V_{OH} = 2.4 V	04, 08, 10, 12, 13, 14, 15		50	µA
			V_{OH} = 4.5 V	02, 06		50	µA
High-impedence (off-state) output low current	I_{OLZ}	V_{CC} = 5.5 V V_{OL} = 0.45 V		02, 04, 06, 08, 10, 12, 13, 14, 15		-50	µA
Input diode clamping voltage	V_{IC}	V_{CC} = 5.5 V T_A = 25°C	I_{IN} = -12 mA	01, 02, 05, 06		-1.5	V
			I_{IN} = -10 mA	03, 04, 07, 8-15			
Supply current	I_{CC}	V_{CC} = 5.5 V 3/		01, 02, 05-10, 14		170	mA
				03, 04, 13		75	
				11, 12, 15		90	
Address access time	t_{AVQV}	V_{CC} = 4.5 V and 5.5 V C_L = 30 pF See figure 5		01, 02, 05, 06, 09, 10		60	ns
				03, 04		70	
				07, 08, 14		45	
				11, 12		75	
				13		50	
				15		55	
Chip select time	t_{SVQV}			01-06, 09-12		45	ns
				07, 08, 13, 14		35	
				15		40	
Chip select output disable time	t_{SCQV}			01, 03, 05		50	ns
				07		35	
				09, 11		45	
Write recovery time	t_{WHQV}			01, 02, 05, 06, 09 10, 11, 12		50	ns
				03, 04		55	
				07, 08		40	
				13, 14		40	
				15		45	
Output select time	t_{ELQV}			14		35	ns
				15		40	
Output select disable time to high Z	t_{EHQZ}			14		35	ns
				15		40	
Write setup time	t_{WLQV}			01, 03, 05, 09, 11		45	ns
				07		35	
Write pulse width	t_{WLWH}			01, 02, 05, 06, 09, 10, 15	40		ns
				03, 04	50		
				07, 08, 13, 14	35		
				11, 12	55		

TABLE I. Electrical performance characteristics.

Test	Symbol	Conditions 1/ -55°C ≤ T_C ≤ +125°C unless otherwise specified	Device Type	Limits		Units
				Min	Max	
Data setup time prior to write	t_{DCWL}	V_{CC} = 4.5 V and 5.5 V C_L = 30 pF See figure 5	01, 02, 05, 06-12, 14, 15	5		ns
			03, 04, 13	10		
Data hold time after write	t_{WHDC}		01, 02, 05-15	5		ns
			03, 04	10		
Address setup time prior to write	t_{AVWL}		01, 02	15		ns
			03-06, 09-13, 15	10		
			07, 08, 14	5		
Address hold time after write	t_{WHAC}		01, 02, 07, 08, 13, 14, 15	5		ns
			03-06, 09-12	10		
Chip select setup time prior to write	t_{SVWL}		01, 02, 05-12, 14, 15	5		ns
			03, 04, 13	10		
Chip select hold time after write	t_{WHSC}		01, 02, 05-15	5		ns
			03, 04	10		
Write enable time to high impedence	t_{WLQZ}		02, 04, 06, 10, 12,13, 14, 15		45	ns
			08		35	
Chip select disable time to high impedance	t_{SCQZ}		01, 05, 02, 04, 06		50	ns
			07, 08, 13, 14		35	
			09, 10, 11, 12		45	
			15		40	

1/ Complete terminal conditions shall be specified in table III.
2/ Not more than one output shall be shorted at one time.
3/ I_{CC} is measured with all inputs grounded for device types 01-08 and 13; and all inputs and outputs open for device types 09-12, 14, and 15.

TABLE II. Electrical test requirements.

MIL-PRF-38535 test requirements	Subgroups (see table III)	
	Class S devices	Class B devices
Interim electrical parameters	1	1
Final electrical test parameters	1*, 2, 3, 7, 9, 10, 11	1*, 2, 3, 7, 9
Group A test requirements	1, 2, 3, 7, 8, 9, 10, 11	1, 2, 3, 7, 8 9, 10, 11
Group B end-point electrical parameters subgroup 5	1, 2, 3, 7, 8, 9, 10, 11	N/A
Group C end-point electrical parameters	1, 2, 3, 7, 8, 9, 10, 11	1, 2, 3
Group D end-point electrical parameters	1, 2, 3	1, 2, 3

* indicates PDA applies to subgroups 1 (see 4.2c).

3.8 Microcircuit group assignment. The devices covered by this specification shall be in microcircuit group number 13 (see MIL-PRF-38535.)

4. VERIFICATION

4.1 Sampling and inspection. Sampling and inspection procedures shall be in accordance with MIL-PRF-38535 or as modified in the device manufacturer's Quality Management (QM) plan. The modification in the QM plan shall not effect the form, fit, or function as described herein.

4.2 Screening. Screening shall be in accordance with MIL-PRF-38535 and shall be conducted on all devices prior to qualification and quality conformance inspection. The following additional criteria shall apply:

a. The burn-in test duration, test condition, and test temperature, or approved alternatives shall be as specified in the device manufacturer's QM plan in accordance with MIL-PRF-38535. The burn-in test circuit shall be maintained under document control by the device manufacturer's Technology Review Board (TRB) in accordance with MIL-PRF-38535 and shall be made available to the acquiring or preparing activity upon request. The test circuit shall specify the inputs, outputs, biases, and power dissipation, as applicable, in accordance with the intent specified in test method 1015 of MIL-STD-883.

b. Interim and final electrical test parameters shall be as specified in table II, except interim electrical parameters test prior to burn-in is optional at the discretion of the manufacturer.

c. Additional screening for space level product shall be as specified in MIL-PRF-38535, appendix B.

4.3 Qualification inspection. Qualification inspection shall be in accordance with MIL-PRF-38535.

4.4 Technology Conformance inspection (TCI). Technology conformance inspection shall be in accordance with MIL-PRF-38535 and herein for groups A, B, C, and D inspections (see 4.4.1 through 4.4.4).

4.4.1 Group A inspection. Group A inspection shall be in accordance with table III of MIL-PRF-38535 and as follows:

a. Tests shall be as specified in table II herein.

b. Subgroups 4, 5, and 6 shall be omitted.

4.4.2 Group B inspection. Group B inspection shall be in accordance with table II MIL-PRF-38535.

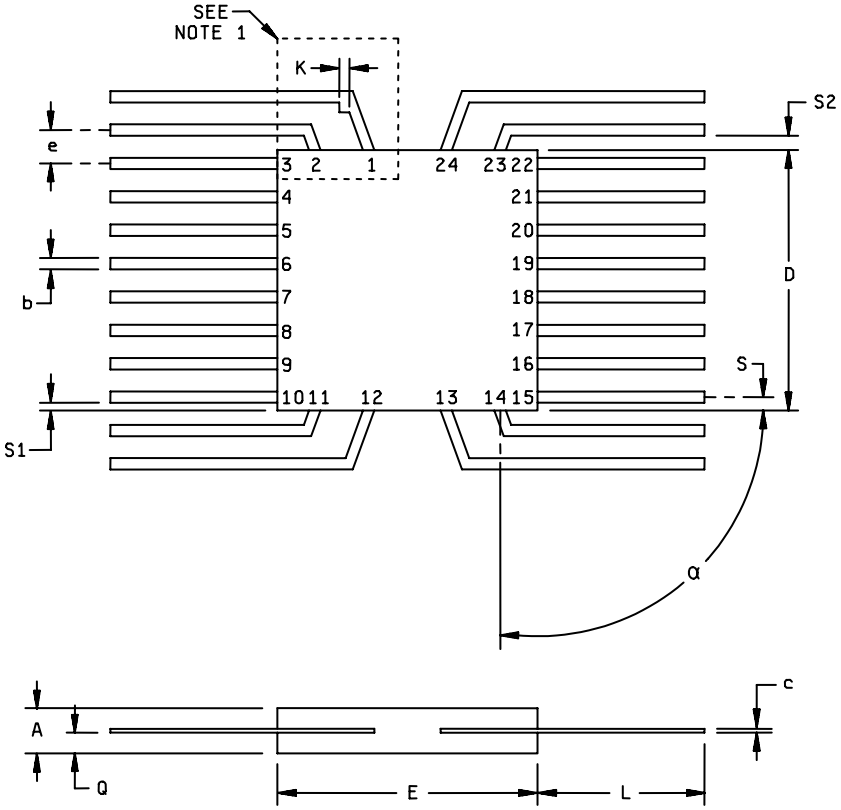

Symbol	Inches		Millmeters		Notes
	Min	Max	Min	Max	
A	.045	.090	1.14	2.29	
b	.015	.019	0.38	0.48	5
c	.003	.006	0.08	0.15	5
D		.440		11.18	3
E	.360	.420	9.14	10.67	
E_1		.440		11.18	3
e	.050 BSC		1.27 BSC		4, 6
k	.015 TYP		.38 TYP		9
L	.250	.370	6.35	9.40	
Q	.010	.040	.25	1.02	2
S		.045		1.14	7
S_1	.000		0.00		8
S_2	.004		0.10		10
α	30°	90°	30°	90°	11, 12

FIGURE 1. Case outline X (24 lead, 3/8” x 3/8” flat package).

NOTES:

1. Index area: a notch or pin one identification mark shall be located adjacent to pin one and shall be located within the shaded area shown. The manufacturer's identification shall not be used as a pin one identification mark. Alternatively, a tab (dimension k) may be used to identify pin one.
2. Dimension Q shall be measured at the point of exit of the lead from the body. Dimension Q shall be .0085 (0.216 mm) minimum when lead finish A is applied.
3. This dimension allows for off-center lid, meniscus and glass overrun.
4. The basic pin spacing is .050 (1.25) mm) between centerlines. Each pin centerline shall be located within ±.005 (0.13 mm) of its exact longitudinal position relative to pins 1 and 24.
5. All leads – Increase maximum limit by .003 (0.08 mm) measured at the center of the flat, when lead finish A is applied.
6. Twenty-two spaces.
7. Applies to all four corners (leads number 3, 10, 15, and 22).
8. Dimension S_1 (MIL-PRF-38535) may be .000 (0.00 mm) if leads number 3, 10, 15, and 22 bend toward the cavity of the package within one lead's width from the point of entry of the lead into the body. (MIL-PRF-38535), figure C-4 shall apply for bottom or side brazed lead configurations.
9. Optional, see note 1. If a pin one identifcation mark is used in addition to this tab, the minimum limit of dimension k does not apply.
10. Applies to leads number 2, 11, 14, and 23.
11. Lead configuration is optional within dimension E except dimension b and c apply (MIL-PRF-38535).
12. Applies to leads number 1, 2, 11, 12, 13, 14, 23, and 24.

THIS PACKAGE NO LONGER AVAILABLE, DO NOT USE FOR NEW DESIGN

FIGURE 1. Case outline X (24 lead, 3/8" x 3/8" flat package) – Continued.

Pin number	Device Types 01, 02, 03, 04, 05, 06, 07, 08, and 13	Device Types 09, 10, 11, 12, 14, and 15			
	CASES				
	E and F	W	Y 1/	X	K
1	$\overline{CS}$	A3	A3	A3	A3
2	A0	A2	A2	A2	A2
3	A1	A1	A1	A1	A1
4	A2	A0	A0	A0	A0
5	A3	A5	A5	A5	A5
6	A4	A6	NC	A6	A6
7	Q	A7	A6	A7	A7
8	GND	GND	A7	GND	GND
9	A5	D1	GND	D1	D1
10	A6	Q1	D1	Q1	Q1
11	A7	D2	Q1	D2	D2
12	A8	Q2	D2	NC	NC
13	A9	D3	Q2	NC	NC
14	$\overline{WE}$	Q3	D3	Q2	Q2
15	DIN	D4	Q3	D3	D3
16	V_{CC}	Q4	D4	Q3	Q3
17		CS2	Q4	D4	D4
18		$\overline{OE}$	NC	Q4	Q4
19		$\overline{CS1}$	CS2	CS2	CS2
20		$\overline{WE}$	$\overline{OE}$	$\overline{OE}$	$\overline{OE}$
21		A4	$\overline{CS1}$	$\overline{CS1}$	$\overline{CS1}$
22		V_{CC}	$\overline{WE}$	$\overline{WE}$	$\overline{WE}$
23			A4	A4	A4
24			V_{CC}	V_{CC}	V_{CC}

NOTE:
1/ Option A with active terminals on plane 1.

FIGURE 2. Terminal connections.

Device types 01, 03, 05, and 07

Inputs			Output	Mode
$\overline{CS}$	$\overline{WE}$	D_{IN}	Open collector	
H	X	X	H	Not selected
L	L	L	H	Write “0”
L	L	H	H	Write “1”
L	H	X	D_{OUT}	Read

H = High voltage level
L = Low voltage level
X = Don’t care (high or low)

Device types 02, 04, 06, 08 and 13

Inputs			Output	Mode
$\overline{CS}$	$\overline{WE}$	D_{IN}	Q	
H	X	X	High Z	Not selected
L	L	L	High Z	Write “0”
L	L	H	High Z	Write “1”
L	H	X	Q	Read

H = High voltage level
L = Low voltage level
X = Don’t care (high or low)

FIGURE 3. Truth tables.

Device types 09 and 11

Inputs					Outputs	
$\overline{OE}$ Pin 18	$\overline{CS}_1$ Pin 19	CS_2 Pin 17	$\overline{WE}$ Pin 20	$D_1 – D_4$ Pins 9, 11, 13, 15	Open collector	MODE
X	H	X	X	X	High	Not Selected
X	X	L	X	X	High	Not Selected
L	L	H	H	X	$Q_1 – Q_4$	Read Stored Data
X	L	H	L	L	High	Write “0”
X	L	H	L	H	High	Write “1”
H	L	H	H	X	High	Output Disabled
H	L	H	L	L	High	Write “0” (Output Disabled)
H	L	H	L	H	High	Write “1” (Output Disabled)

H = High Voltage, L = Low Voltage, X = Don’t Care (High or Low)

Device types 10, 12, 14 and 15

Inputs					Outputs	
$\overline{OE}$ Pin 18	$\overline{CS}_1$ Pin 19	CS_2 Pin 17	$\overline{WE}$ Pin 20	$D_1 – D_4$ Pins 9, 11, 13, 15	3-State	MODE
X	H	X	X	X	High Z	Not Selected
X	X	L	X	X	High Z	Not Selected
L	L	H	H	X	$Q_1 – Q_4$	Read Stored Data
X	L	H	L	L	High Z	Write “0”
X	L	H	L	H	High Z	Write “1”
H	L	H	H	X	High Z	Output Disabled
H	L	H	L	L	High Z	Write “0” (Output Disabled)
H	L	H	L	H	High Z	Write “1” (Output Disabled)

H = High Voltage, L = Low Voltage, X = Don’t Care (High or Low), High Z = High Impedance

FIGURE 3. Truth tables – Continued.

DEVICE TYPES 01,03,05 AND 07

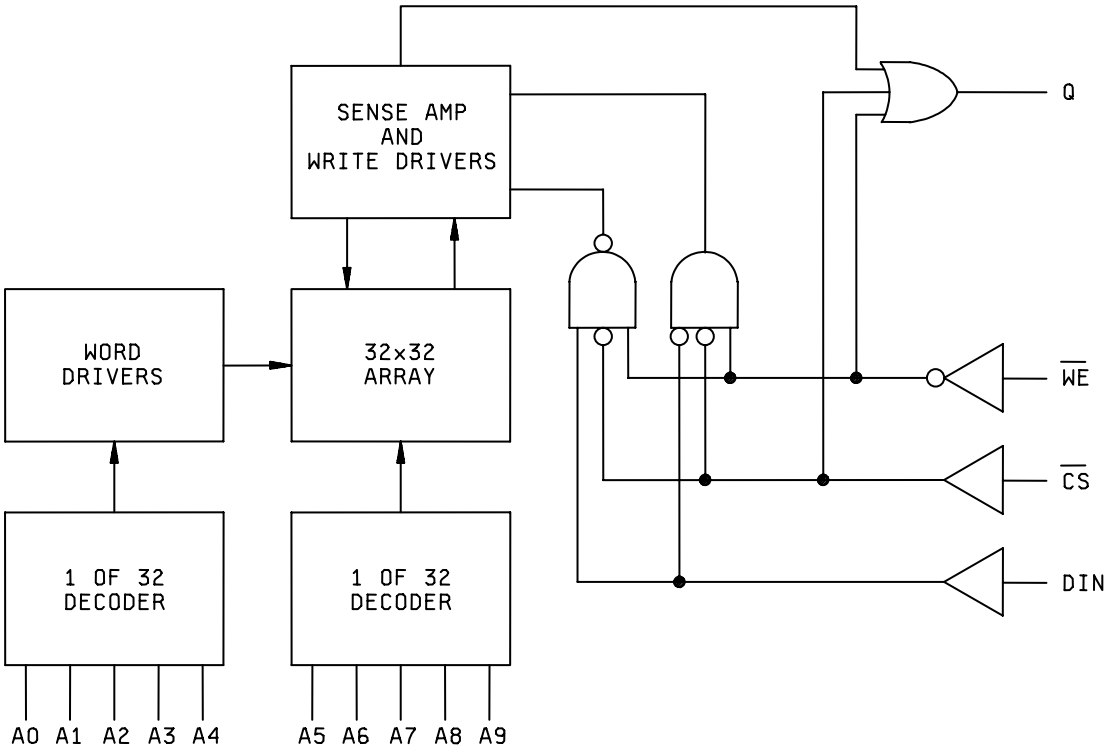

FIGURE 4. Logic diagrams.

DEVICE TYPES 02,04,06,08 AND 13

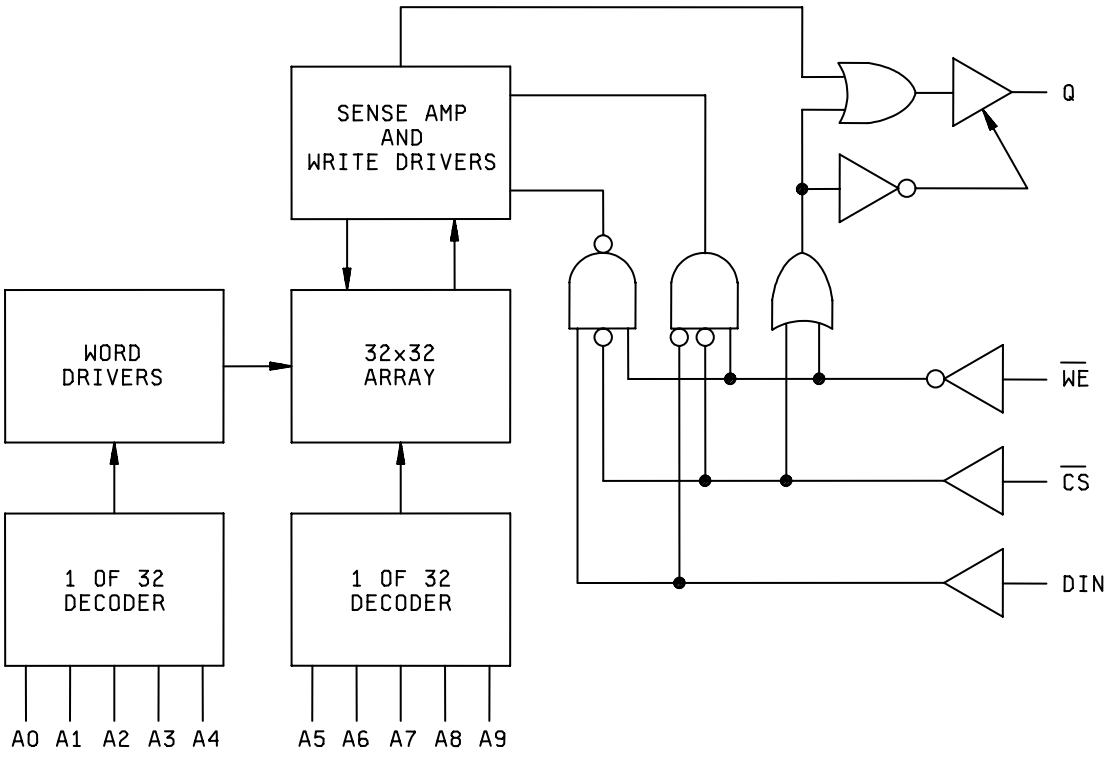

FIGURE 4. Logic diagrams – Continued.

DEVICE TYPES 09,10,11,12,14 AND 15

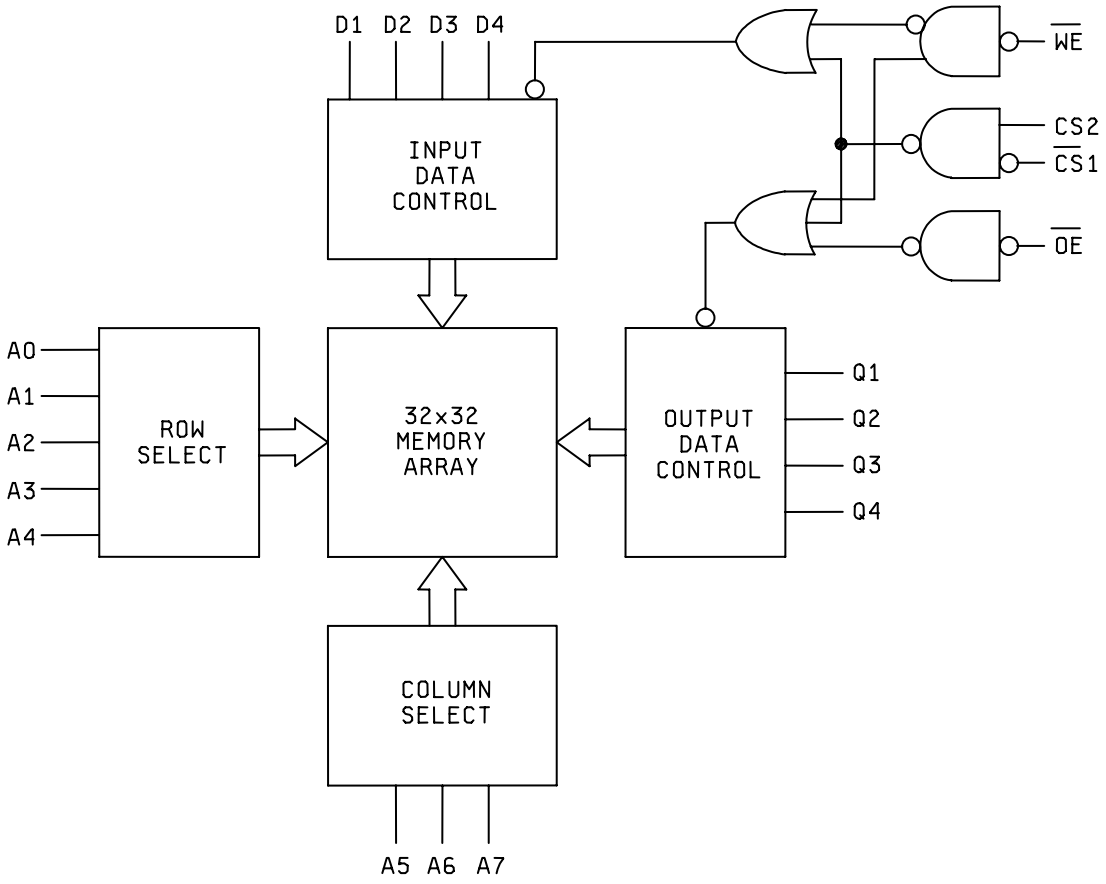

FIGURE 4. Logic diagrams – Continued.

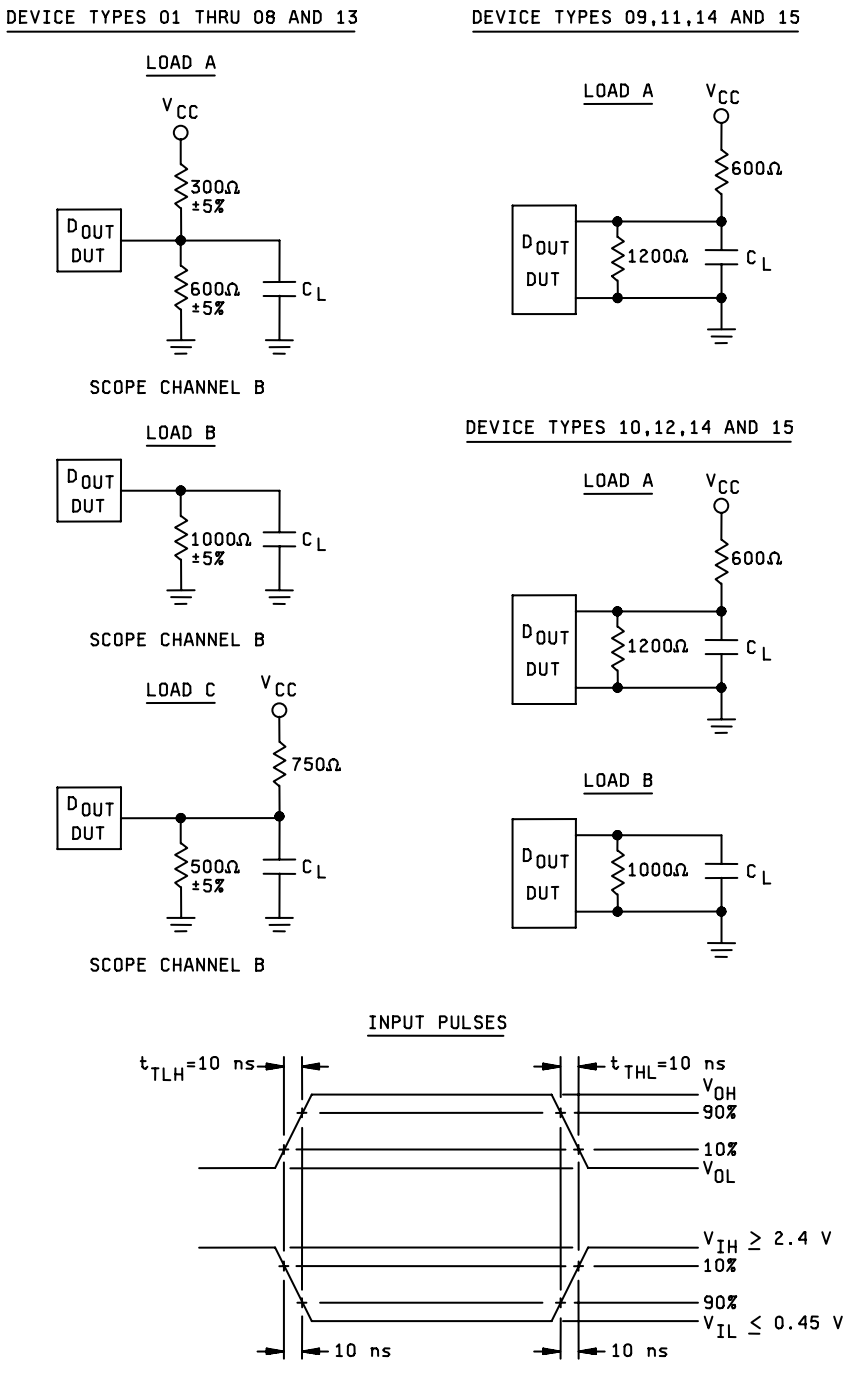

NOTES:

1. Use load circuit A in transitions between logic level and from high Z state to logic low state.
2. Use load circuit B in transitions from high Z state to logic high state.
3. Use load circuit C in transitions rom a logic level to the high Z state.
4. C_L = 30 pF ±5% including wiring and probe capacitance.

FIGURE 5. Switching time load circuits, test conditions and waveforms.

DEVICE TYPES 01,03,05 AND 07

READ MODE

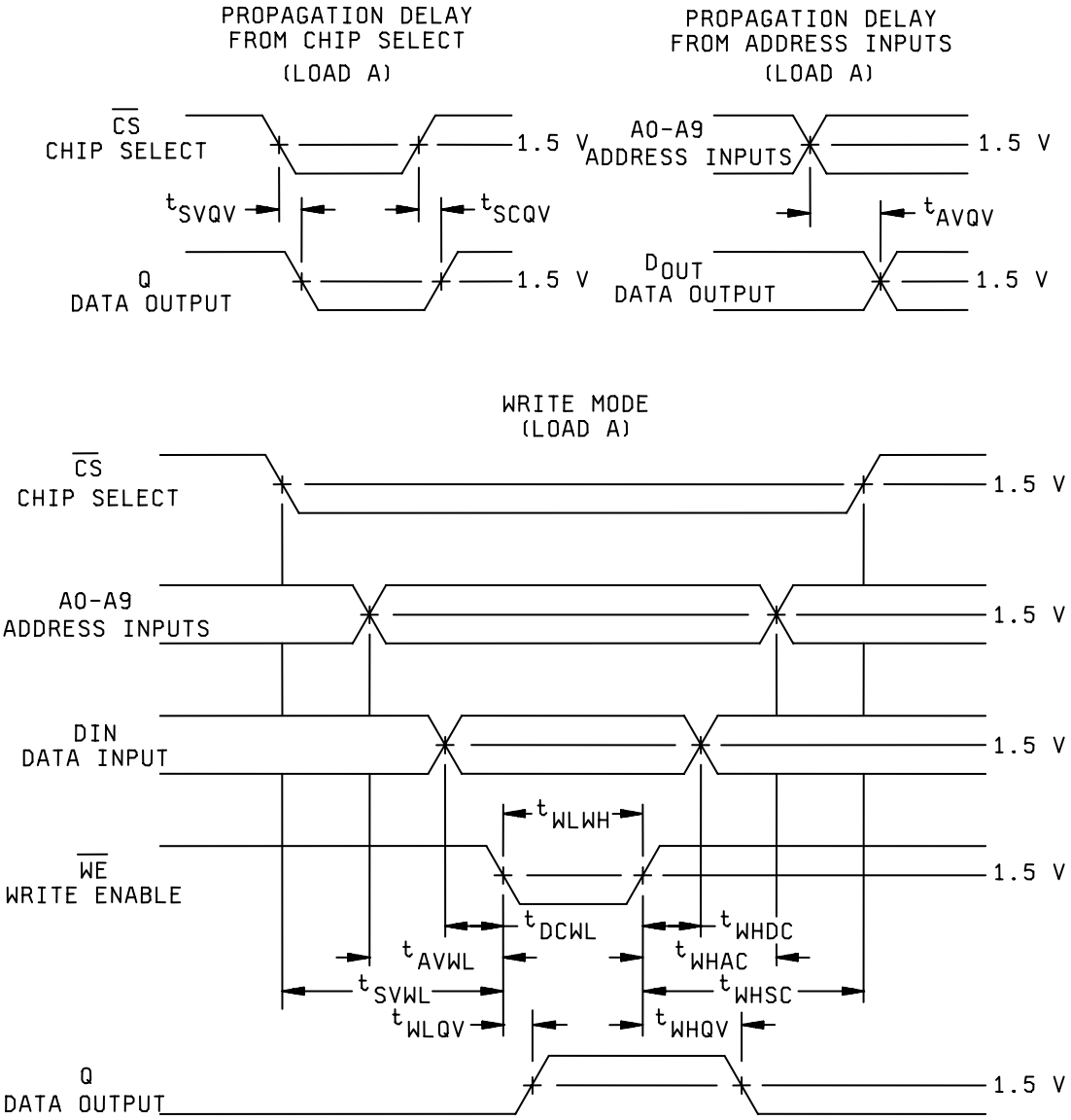

FIGURE 5. Switching time load circuits, test conditions and waveforms – Continued.

DEVICE TYPES 02,04,06,08 AND 13

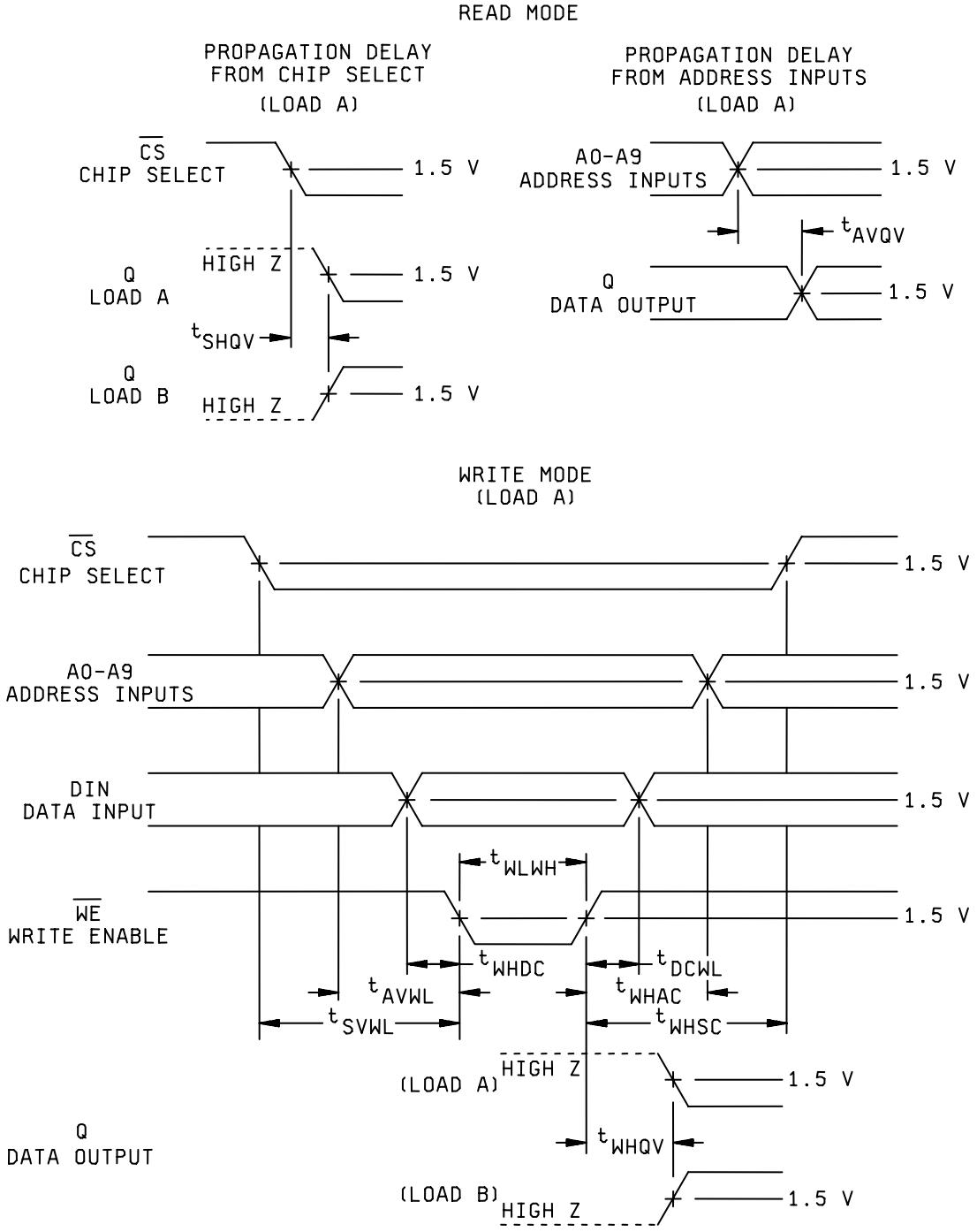

FIGURE 5. Switching time load circuits, test conditions and waveforms – Continued.

DEVICE TYPES 02,04,06,08 AND 13

WRITE ENABLE TO HIGH Z DELAY
(LOAD C)

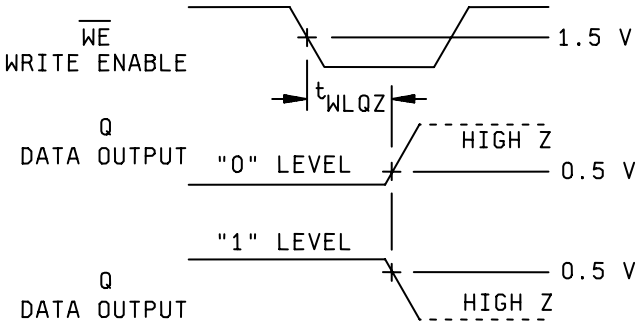

PROPAGATION DELAY FROM CHIP
SELECT TO HIGH Z
(LOAD C)

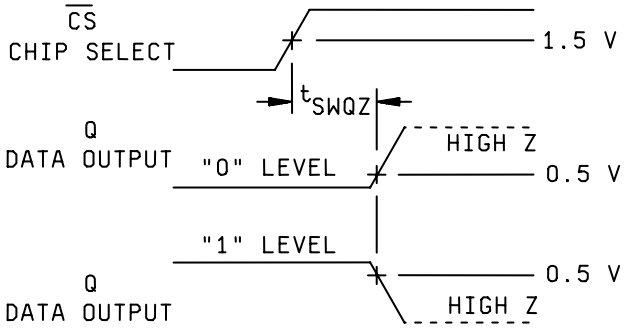

(All TXXXZ parameters are measured at a delta of 0.5 V from the logic level and using load C.)

FIGURE 5. Switching time load circuits, test conditions and waveforms – Continued.

DEVICE TYPES 09 AND 11

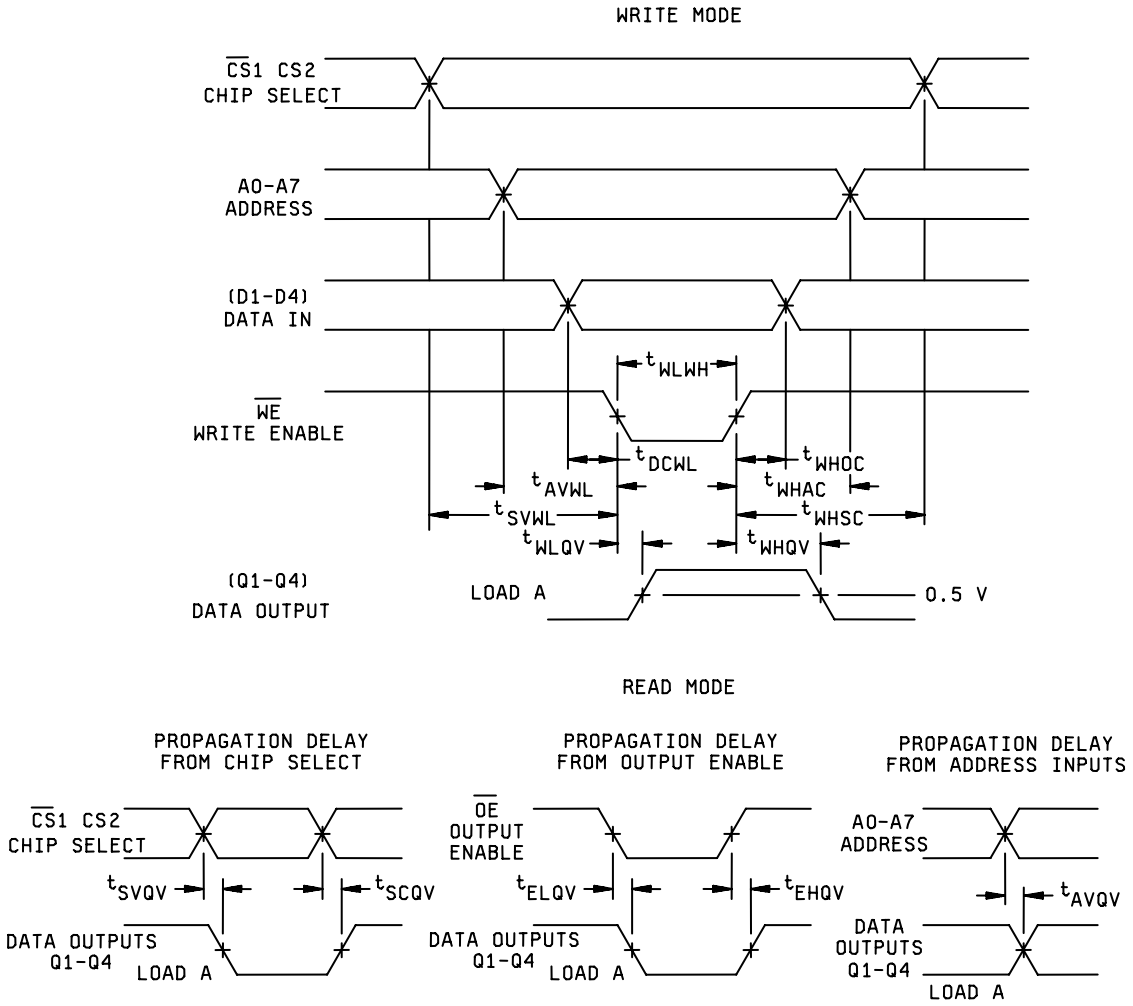

(All above measurements referenced to 1.5 V unless otherwise indicated)

NOTE: Timing Diagram represents one solution which results in an optimum cycle time. Timing may be changed to fit various applications as long as the worst case limits are not violated.

FIGURE 5. Switching time load circuits, test conditions and waveforms – Continued.

DEVICE TYPES 10,12,14 AND 15

READ MODE

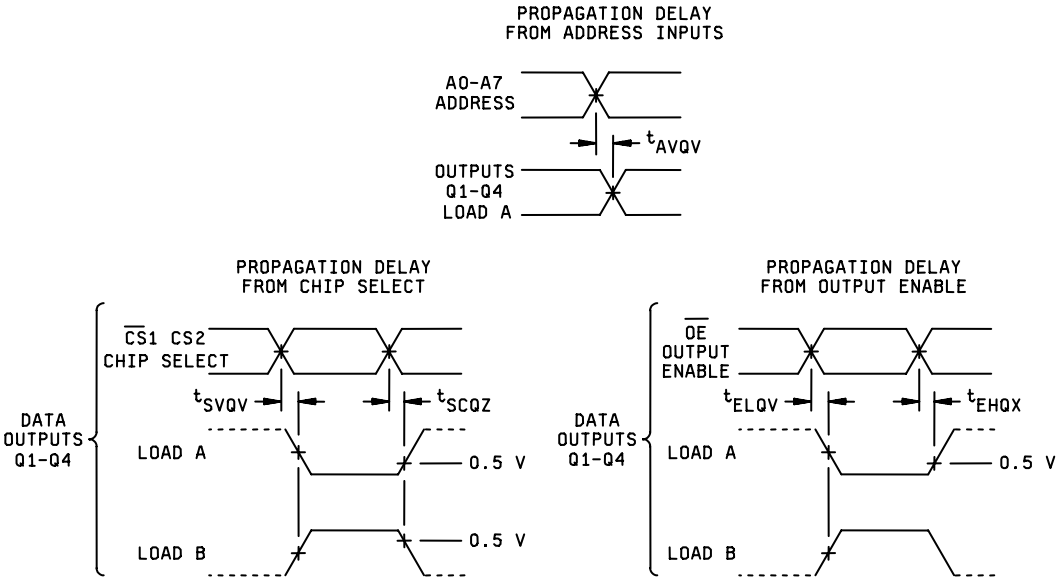

WRITE MODE

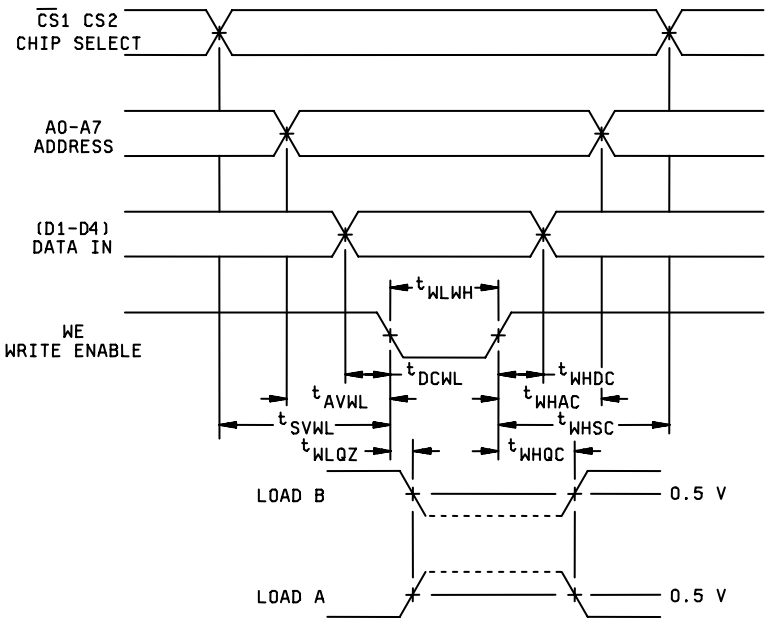

(All above measurements referenced to 1.5 V unless otherwise indicated)

NOTE: Timing Diagram represents one solution which results in an optimum cycle time. Timing may be changed to fit various applications as long as the worst case limits are not violated.

FIGURE 5. Switching time load circuits, test conditions and waveforms – Continued.

TABLE III. Group A inspection for device types 01and 05.

Terminal conditions (pins not designated may be high ≥2.1 V or low ≤0.8 V, or open or GND)

Subgroup	Symbol	MIL-STD-883 method	Case E, F Test No.	1 $\overline{CS}$	2 A0	3 A1	4 A2	5 A3	6 A4	7 Q	8 GND	9 A5	10 A6	11 A7	12 A8	13 A9	14 $\overline{WE}$	15 D_{IN}	16 V_{CC}	Meas. terminal	Test limits Min	Max	Unit
1	V_{IC}		1	-12 mA							GND								5.5 V	$\overline{CS}$		-1.5	V
T_C = 25°C			2		-12 mA						"								"	A0		"	"
			3			-12 mA					"								"	A1		"	"
			4				-12 mA				"								"	A2		"	"
			5					-12 mA			"								"	A3		"	"
			6						-12 mA		"								"	A4		"	"
			7								"	-12 mA							"	A5		"	"
			8								"		-12 mA						"	A6		"	"
			9								"			-12 mA					"	A7		"	"
			10								"				-12 mA				"	A8		"	"
			11								"					-12 mA			"	A9		"	"
			12								"						-12 mA		"	$\overline{WE}$		"	"
			13								"							-12 mA	"	D_{IN}	-1.0	-400	µA
	I_{IL}	3009	14	0.45 V							"								"	$\overline{CS}$	"	"	"
			15		0.45 V						"								"	A0	"	"	"
			16			0.45 V					"								"	A1	"	"	"
			17				0.45 V				"								"	A2	"	"	"
			18					0.45 V			"								"	A3	"	"	"
			19						0.45 V		"								"	A4	"	"	"
			20								"	0.45 V							"	A5	"	"	"
			21								"		0.45 V						"	A6	"	"	"
			22								"			0.45 V					"	A7	"	"	"
			23								"				0.45 V				"	A8	"	"	"
			24								"					0.45 V			"	A9	"	"	"
			25								"						0.45 V		"	$\overline{WE}$	"	"	"
			26								"							0.45 V	"	D_{IN}	"	"	"
	I_{IH}	3010	27	5.5 V							"								"	$\overline{CS}$	"	40	"
			28		5.5 V						"								"	A0	"	"	"
			29			5.5 V					"								"	A1	"	"	"
			30				5.5 V				"								"	A2	"	"	"
			31					5.5 V			"								"	A3	"	"	"
			32						5.5 V		"								"	A4	"	"	"
			33								"	5.5 V							"	A5	"	"	"
			34								"		5.5 V						"	A6	"	"	"
			35								"			5.5 V					"	A7	"	"	"
			36								"				5.5 V				"	A8	"	"	"
			37								"					5.5 V			"	A9	"	"	"
			38								"						5.5 V		"	$\overline{WE}$	"	"	"
			39								"							5.5 V	"	D_{IN}	"	"	"
	I_{CEX}	3010	40	GND	GND	GND	GND	GND	GND	5.5 V	"	GND	GND	GND	GND	GND	2/	5.5 V	"	Q		100	"
	I_{CC}	3005	41	GND	GND	GND	GND	GND	GND		"	GND	GND	GND	GND	GND	GND	GND	"	V_{CC}		1/	mA
	V_{OL}	3007	42	0.8 V	0.8 V	0.8 V	0.8 V	0.8 V	0.8 V	16 mA	"	0.8 V	0.8 V	0.8 V	0.8 V	0.8 V	2/	0.8 V	4.5 V	D_{OUT}		0.45	V
2	Same tests, terminal conditions, and limits as for subgroup 1, except T_C = 125ºC and V_{IC} tests are omitted.																						
3	Same tests, terminal conditions, and limits as for subgroup 1, except T_C = -55ºC and V_{IC} tests are omitted.																						

See footnotes at end of table.

TABLE III. Group A inspection for device types 01and 05 – Continued.

Terminal conditions (pins not designated may be high ≥2.1 V or low ≤0.8 V, or open or GND)

Subgroup	Symbol	MIL-STD-883 method	Case E, F Test No.	1 $\overline{CS}$	2 A0	3 A1	4 A2	5 A3	6 A4	7 Q	8 GND	9 A5	10 A6	11 A7	12 A8	13 A9	14 $\overline{WE}$	15 D_{IN}	16 V_{CC}	Meas. terminal	Test limits Min	Max	Unit
7 T_C = 25°C	Functional tests	3014	43	3/	3/	3/	3/	3/	3/	3/	GND	3/	3/	3/	3/	3/	3/	3/	3/	Q		3/	
8	Same tests, terminal conditions, and limits as for subgroup 7, except T_C = 125ºC and -55ºC.																						
9 T_C = 25°C	t_{AVQV}	GALPAT Fig. 5	44	4/	4/	4/	4/	4/	4/	5/	GND	4/	4/	4/	4/	4/	4/	4/	4/	Q		60	ns
	t_{SVQV}	"	45	"	"	"	"	"	"	"	"	"	"	"	"	"	"	"	"	"		45	"
	t_{SCQZ}	"	46	"	"	"	"	"	"	"	"	"	"	"	"	"	"	"	"	"		50	"
	t_{WLQV}	"	47	"	"	"	"	"	"	"	"	"	"	"	"	"	"	"	"	"		45	"
	t_{WHQV}	"	48	"	"	"	"	"	"	"	"	"	"	"	"	"	"	"	"	"		50	"
	t_{WLWH}	GGII Fig. 5	49	6/	6/	6/	6/	6/	6/	"	"	6/	6/	6/	6/	6/	6/	6/	6/	"	40		"
	t_{WHDC}	"	50	"	"	"	"	"	"	"	"	"	"	"	"	"	"	"	"	"	5		"
	t_{DCWL}	"	51	"	"	"	"	"	"	"	"	"	"	"	"	"	"	"	"	"	5		"
	t_{AVWL}	"	52	"	"	"	"	"	"	"	"	"	"	"	"	"	"	"	"	"	15, 7/		"
	t_{WHAC}	"	53	"	"	"	"	"	"	"	"	"	"	"	"	"	"	"	"	"	5, 7/		"
	t_{SVWL}	"	54	"	"	"	"	"	"	"	"	"	"	"	"	"	"	"	"	"	5		"
	t_{WHSC}	"	55	"	"	"	"	"	"	"	"	"	"	"	"	"	"	"	"	"	5		"
10	Same tests, terminal conditions, and limits as for subgroup 9, except T_C = 125°C.																						
11	Same tests, terminal conditions, and limits as for subgroup 10, except T_C = -55°C.																						

See footnotes at end of table.

TABLE III. Group A inspection for device types 02and 06.

Terminal conditions (pins not designated may be high ≥2.1 V or low ≤0.8 V, or open or GND)

Subgroup	Symbol	MIL-STD-883 method	Case E, F Test No.	1 $\overline{CS}$	2 A0	3 A1	4 A2	5 A3	6 A4	7 Q	8 GND	9 A5	10 A6	11 A7	12 A8	13 A9	14 $\overline{WE}$	15 D_{IN}	16 V_{CC}	Meas. terminal	Test limits Min	Max	Unit
1 T_C = 25°C	V_{IC}		1	-12 mA							GND								5.5 V	$\overline{CS}$		-1.5	V
			2		-12 mA						"								"	A0		"	"
			3			-12 mA					"								"	A1		"	"
			4				-12 mA				"								"	A2		"	"
			5					-12 mA			"								"	A3		"	"
			6						-12 mA		"								"	A4		"	"
			7								"	-12 mA							"	A5		"	"
			8								"		-12 mA						"	A6		"	"
			9								"			-12 mA					"	A7		"	"
			10								"				-12 mA				"	A8		"	"
			11								"					-12 mA			"	A9		"	"
			12								"						-12 mA		"	$\overline{WE}$		"	"
			13								"							-12 mA	"	D_{IN}		"	"
	I_{IL}	3009	14	0.45 V							"								"	$\overline{CS}$	-1.0	-400	μA
			15		0.45 V						"								"	A0	"	"	"
			16			0.45 V					"								"	A1	"	"	"
			17				0.45 V				"								"	A2	"	"	"
			18					0.45 V			"								"	A3	"	"	"
			19						0.45 V		"								"	A4	"	"	"
			20								"	0.45 V							"	A5	"	"	"
			21								"		0.45 V						"	A6	"	"	"
			22								"			0.45 V					"	A7	"	"	"
			23								"				0.45 V				"	A8	"	"	"
			24								"					0.45 V			"	A9	"	"	"
			25								"						0.45 V		"	$\overline{WE}$	"	"	"
			26								"							0.45 V	"	D_{IN}	"	"	"
	I_{IH}	3010	27	5.5 V							"								"	$\overline{CS}$		40	"
			28		5.5 V						"								"	A0		"	"
			29			5.5 V					"								"	A1		"	"
			30				5.5 V				"								"	A2		"	"
			31					5.5 V			"								"	A3		"	"
			32						5.5 V		"								"	A4		"	"
			33								"	5.5 V							"	A5		"	"
			34								"		5.5 V						"	A6		"	"
			35								"			5.5 V					"	A7		"	"
			36								"				5.5 V				"	A8		"	"
			37								"					5.5 V			"	A9		"	"
			38								"						5.5 V		"	$\overline{WE}$		"	"
			39								"							5.5 V	"	D_{IN}		"	"
	I_{OS}	3011	40	GND	GND	GND	GND	GND	GND	GND	"	GND	GND	GND	GND	GND	2/	5.5 V	"	Q	-20	-100	mA
	I_{CC}	3005	41	GND	GND	GND	GND	GND	GND		"	GND	GND	GND	GND	GND	GND	GND	"	V_{CC}		1/	mA
	I_{OHZ}		42	0.4 V	0.4 V	0.4 V	0.4 V	0.4 V	0.4 V	4.5 V	"	0.4 V	0.4 V	0.4 V	0.4 V	0.4 V	0.4 V	0.4 V	"	Q		50	μA
	I_{OLZ}		43	0.4 V	0.4 V	0.4 V	0.4 V	0.4 V	0.4 V	0.45 V	"	0.4 V	0.4 V	0.4 V	0.4 V	0.4 V	0.4 V	0.4 V	"	Q		-50	μA
	V_{OL}	3007	44	0.8 V	0.8 V	0.8 V	0.8 V	0.8 V	0.8 V	16 mA	"	0.8 V	0.8 V	0.8 V	0.8 V	0.8 V	2/	0.4 V	4.5 V	Q		0.45	V
	V_{OH}	3006	45	0.8 V	0.8 V	0.8 V	0.8 V	0.8 V	0.8 V	-5.2 mA	"	0.8 V	0.8 V	0.8 V	0.8 V	0.8 V	2/	2.1 V	4.5 V	Q	2.4		V
2	Same tests, terminal conditions, and limits as for subgroup 1, except T_C = 125ºC and V_{IC} tests are omitted.																						
3	Same tests, terminal conditions, and limits as for subgroup 1, except T_C = -55ºC and V_{IC} tests are omitted.																						

See footnotes at end of table.

TABLE III. Group A inspection for device types 02 and 06 - Continued.

Terminal conditions (pins not designated may be high ≥2.1 V or low ≤0.8 V, or open or GND)

Subgroup	Symbol	MIL-STD-883 method	Case E, F Test No.	1 $\overline{CS}$	2 A0	3 A1	4 A2	5 A3	6 A4	7 Q	8 GND	9 A5	10 A6	11 A7	12 A8	13 A9	14 $\overline{WE}$	15 D_{IN}	16 V_{CC}	Meas. terminal	Test limits Min	Max	Unit
7 T_C = 25°C	Functional tests	3014	46	3/	3/	3/	3/	3/	3/	3/	GND	3/	3/	3/	3/	3/	3/	3/	3/	Q		3/	
8	Same tests, terminal conditions, and limits as subgroup 7, except T_C = +125ºC and -55ºC.																						
9 T_C = 25°C	t_{AVQV}	GALPAT Fig. 5	47	4/	4/	4/	4/	4/	4/	5/	GND	4/	4/	4/	4/	4/	4/	4/	4/	Q		60	ns
	t_{SVQV}	"	48	"	"	"	"	"	"	"	"	"	"	"	"	"	"	"	"	"		45	"
	t_{SCQZ}	"	49	"	"	"	"	"	"	"	"	"	"	"	"	"	"	"	"	"		50	"
	t_{WLQZ}	"	50	"	"	"	"	"	"	"	"	"	"	"	"	"	"	"	"	"		45	"
	t_{WHQV}	"	51	"	"	"	"	"	"	"	"	"	"	"	"	"	"	"	"	"		50	"
	t_{WLWH}	GGII Fig. 5	52	6/	6/	6/	6/	6/	6/	"	"	6/	6/	6/	6/	6/	6/	6/	6/	"	40		"
	t_{WHDC}	"	53	"	"	"	"	"	"	"	"	"	"	"	"	"	"	"	"	"	5		"
	t_{DCWL}	"	54	"	"	"	"	"	"	"	"	"	"	"	"	"	"	"	"	"	5		"
	t_{AVWL}	"	55	"	"	"	"	"	"	"	"	"	"	"	"	"	"	"	"	"	15,7/		"
	t_{WHAC}	"	56	"	"	"	"	"	"	"	"	"	"	"	"	"	"	"	"	"	5,7/		"
	t_{SVWL}	"	57	"	"	"	"	"	"	"	"	"	"	"	"	"	"	"	"	"	5		"
	t_{WHSC}	"	58	"	"	"	"	"	"	"	"	"	"	"	"	"	"	"	"	"	5		"
10	Same tests, terminal conditions, and limits as for subgroup 9, except T_C = 125°C.																						
11	Same tests, terminal conditions, and limits as for subgroup 9, except T_C = -55°C.																						

See footnotes at end of table.

TABLE III. Group A inspection for device type 03.

Terminal conditions (pins not designated may be high ≥2.1 V or low ≤0.8 V, or open or GND)

Subgroup	Symbol	MIL-STD-883 method	Case E, F Test No.	1 $\overline{CS}$	2 A0	3 A1	4 A2	5 A3	6 A4	7 Q	8 GND	9 A5	10 A6	11 A7	12 A8	13 A9	14 $\overline{WE}$	15 D_{IN}	16 V_{CC}	Meas. terminal	Test limits Min	Max	Unit
1 T_C = 25°C	V_{IC}		1	-10 mA							GND								5.5 V	$\overline{CS}$		-1.5	V
			2		-10 mA						"								"	A0		"	"
			3			-10 mA					"								"	A1		"	"
			4				-10 mA				"								"	A2		"	"
			5					-10 mA			"								"	A3		"	"
			6						-10 mA		"								"	A4		"	"
			7								"	-10 mA							"	A5		"	"
			8								"		-10 mA						"	A6		"	"
			9								"			-10 mA					"	A7		"	"
			10								"				-10 mA				"	A8		"	"
			11								"					-10 mA			"	A9		"	"
			12								"						-10 mA		"	$\overline{WE}$		"	"
			13								"							-10 mA	"	D_{IN}		"	"
	I_{IL}	3009	14	0.45 V							"								"	$\overline{CS}$	-1.0	-400	µA
			15		0.45 V						"								"	A0	"	"	"
			16			0.45 V					"								"	A1	"	"	"
			17				0.45 V				"								"	A2	"	"	"
			18					0.45 V			"								"	A3	"	"	"
			19						0.45 V		"								"	A4	"	"	"
			20								"	0.45 V							"	A5	"	"	"
			21								"		0.45 V						"	A6	"	"	"
			22								"			0.45 V					"	A7	"	"	"
			23								"				0.45 V				"	A8	"	"	"
			24								"					0.45 V			"	A9	"	"	"
			25								"						0.45 V		"	$\overline{WE}$	"	"	"
			26								"							0.45 V	"	D_{IN}	"	"	"
	I_{IH1}	3010	27	5.5 V							"								"	$\overline{CS}$		40	"
			28		5.5 V						"								"	A0		"	"
			29			5.5 V					"								"	A1		"	"
			30				5.5 V				"								"	A2		"	"
			31					5.5 V			"								"	A3		"	"
			32						5.5 V		"								"	A4		"	"
			33								"	5.5 V							"	A5		"	"
			34								"		5.5 V						"	A6		"	"
			35								"			5.5 V					"	A7		"	"
			36								"				5.5 V				"	A8		"	"
			37								"					5.5 V			"	A9		"	"
			38								"						5.5 V		"	$\overline{WE}$		"	"
			39								"							5.5 V	"	D_{IN}		"	"
	I_{CEX}	"	40	GND	GND	GND	GND	GND	GND	4.5 V	"	GND	GND	GND	GND	GND	2/	5.5 V	"	Q		100	
	I_{CC}	3005	41	GND	GND	GND	GND	GND	GND		"	GND	GND	GND	GND	GND	GND	GND	"	V_{CC}		1/	mA
	V_{OL}	3007	44	0.8 V	0.8 V	0.8 V	0.8 V	0.8 V	0.8 V	16 mA	"	0.8 V	0.8 V	0.8 V	0.8 V	0.8 V	2/	0.8 V	0.45 V	Q		0.45	V
2	Same tests, terminal conditions, and limits as for subgroup 1, except T_C = 125ºC and V_{IC} tests are omitted.																						
3	Same tests, terminal conditions, and limits as for subgroup 1, except T_C = -55ºC and V_{IC} tests are omitted.																						

See footnotes at end of table.

TABLE III. Group A inspection for device types 03 – Continued.

Terminal conditions (pins not designated may be high ≥2.1 V or low ≤0.8 V, or open or GND)

Subgroup	Symbol	MIL-STD-883 method	Case E, F Test No.	1 $\overline{CS}$	2 A0	3 A1	4 A2	5 A3	6 A4	7 Q	8 GND	9 A5	10 A6	11 A7	12 A8	13 A9	14 $\overline{WE}$	15 D_{IN}	16 V_{CC}	Meas. terminal	Test limits Min	Max	Unit
7 T_C = 25°C	Functional tests	3014	43	3/	3/	3/	3/	3/	3/	3/	GND	3/	3/	3/	3/	3/	3/	3/	3/	Q		3/	
8	Same tests, terminal conditions, and limits as subgroup 7, except T_C = 125ºC and -55ºC.																						
9 T_C = 25°C	t_{AVQV}	GALPAT Fig. 5	44	4/	4/	4/	4/	4/	4/	5/	GND	4/	4/	4/	4/	4/	4/	4/	4/	Q		70	ns
	t_{SVQV}	"	45	"	"	"	"	"	"	"	"	"	"	"	"	"	"	"	"	"		45	"
	t_{SCQZ}	"	46	"	"	"	"	"	"	"	"	"	"	"	"	"	"	"	"	"		50	"
	t_{WLQZ}	"	47	"	"	"	"	"	"	"	"	"	"	"	"	"	"	"	"	"		45	"
	t_{WHQV}	"	48	"	"	"	"	"	"	"	"	"	"	"	"	"	"	"	"	"		55	"
	t_{WLWH}	GGII Fig. 5	49	6/	6/	6/	6/	6/	6/	"	"	6/	6/	6/	6/	6/	6/	6/	6/	"	50		"
	t_{WHDC}	"	50	"	"	"	"	"	"	"	"	"	"	"	"	"	"	"	"	"	10		"
	t_{DCWL}	"	51	"	"	"	"	"	"	"	"	"	"	"	"	"	"	"	"	"	10		"
	t_{AVWL}	"	52	"	"	"	"	"	"	"	"	"	"	"	"	"	"	"	"	"	10		"
	t_{WHAC}	"	53	"	"	"	"	"	"	"	"	"	"	"	"	"	"	"	"	"	10		"
	t_{SVWL}	"	54	"	"	"	"	"	"	"	"	"	"	"	"	"	"	"	"	"	10		"
	t_{WHSC}	"	55	"	"	"	"	"	"	"	"	"	"	"	"	"	"	"	"	"	10		"
10	Same tests, terminal conditions, and limits as for subgroup 9, except T_C = 125°C.																						
11	Same tests, terminal conditions, and limits as for subgroup 9, except T_C = -55°C.																						

See footnotes at end of table.

TABLE III. Group A inspection for device type 04.

Terminal conditions (pins not designated may be high ≥2.1 V or low ≤0.8 V, or open or GND)

Subgroup	Symbol	MIL-STD-883 method	Case E, F Test No.	1 $\overline{CS}$	2 A0	3 A1	4 A2	5 A3	6 A4	7 Q	8 GND	9 A5	10 A6	11 A7	12 A8	13 A9	14 $\overline{WE}$	15 D_{IN}	16 V_{CC}	Meas. terminal	Test limits Min	Max	Unit
1 T_C = 25°C	V_{IC}		1	-10 mA							GND								5.5 V	$\overline{CS}$		-1.5	V
			2		-10 mA						"								"	A0		"	"
			3			-10 mA					"								"	A1		"	"
			4				-10 mA				"								"	A2		"	"
			5					-10 mA			"								"	A3		"	"
			6						-10 mA		"								"	A4		"	"
			7								"	-10 mA							"	A5		"	"
			8								"		-10 mA						"	A6		"	"
			9								"			-10 mA					"	A7		"	"
			10								"				-10 mA				"	A8		"	"
			11								"					-10 mA			"	A9		"	"
			12								"						-10 mA		"	$\overline{WE}$		"	"
			13								"							-10 mA	"	D_{IN}		"	"
	I_{IL}	3009	14	0.45 V							"								"	$\overline{CS}$	-1.0	-400	µA
			15		0.45 V						"								"	A0	"	"	"
			16			0.45 V					"								"	A1	"	"	"
			17				0.45 V				"								"	A2	"	"	"
			18					0.45 V			"								"	A3	"	"	"
			19						0.45 V		"								"	A4	"	"	"
			20								"	0.45 V							"	A5	"	"	"
			21								"		0.45 V						"	A6	"	"	"
			22								"			0.45 V					"	A7	"	"	"
			23								"				0.45 V				"	A8	"	"	"
			24								"					0.45 V			"	A9	"	"	"
			25								"						0.45 V		"	$\overline{WE}$	"	"	"
			26								"							0.45 V	"	D_{IN}	"	"	"
	I_{IH1}	3010	27	5.5 V							"								"	$\overline{CS}$		40	"
			28		5.5 V						"								"	A0		"	"
			29			5.5 V					"								"	A1		"	"
			30				5.5 V				"								"	A2		"	"
			31					5.5 V			"								"	A3		"	"
			32						5.5 V		"								"	A4		"	"
			33								"	5.5 V							"	A5		"	"
			34								"		5.5 V						"	A6		"	"
			35								"			5.5 V					"	A7		"	"
			36								"				5.5 V				"	A8		"	"
			37								"					5.5 V			"	A9		"	"
			38								"						5.5 V		"	$\overline{WE}$		"	"
			39								"							5.5 V	"	D_{IN}		"	"
	I_{OS}	3011	40	GND	GND	GND	GND	GND	GND	GND	"	GND	GND	GND	GND	GND	2/	5.5 V	"	Q	-20	-100	mA
	I_{CC}	3005	41	GND	GND	GND	GND	GND	GND		"	GND	GND	GND	GND	GND	GND	GND	"	V_{CC}		1/	mA
	I_{OHZ}		42	0.4 V	0.4 V	0.4 V	0.4 V	0.4 V	0.4 V	2.4 V	"	0.4 V	0.4 V	0.4 V	0.4 V	0.4 V	0.4 V	0.4 V	"	Q		50	µA
	I_{OLZ}		43	0.4 V	0.4 V	0.4 V	0.4 V	0.4 V	0.4 V	0.45 V	"	0.4 V	0.4 V	0.4 V	0.4 V	0.4 V	0.4 V	0.4 V	"	Q		-50	µA
	V_{OL}	3007	44	0.8 V	0.8 V	0.8 V	0.8 V	0.8 V	0.8 V	16 mA	"	0.8 V	0.8 V	0.8 V	0.8 V	0.8 V	2/	0.4 V	4.5 V	Q		0.45	V
	V_{OH}	3006	45	0.8 V	0.8 V	0.8 V	0.8 V	0.8 V	0.8 V	-5.2 mA	"	0.8 V	0.8 V	0.8 V	0.8 V	0.8 V	2/	2.1 V	4.5 V	Q	2.4		V
2	Same tests, terminal conditions, and limits as for subgroup 1, except T_C = 125ºC and V_{IC} tests are omitted.																						
3	Same tests, terminal conditions, and limits as for subgroup 1, except T_C = -55ºC and V_{IC} tests are omitted.																						

See footnotes at end of table.

TABLE III. Group A inspection for device types 04 – Continued.

Terminal conditions (pins not designated may be high ≥2.1 V or low ≤0.8 V, or open or GND)

Subgroup	Symbol	MIL-STD-883 method	Case E, F Test No.	1 $\overline{CS}$	2 A0	3 A1	4 A2	5 A3	6 A4	7 Q	8 GND	9 A5	10 A6	11 A7	12 A8	13 A9	14 $\overline{WE}$	15 D_{IN}	16 V_{CC}	Meas. terminal	Test limits Min	Max	Unit
7 T_C = 25°C	Functional tests	3014	46	3/	3/	3/	3/	3/	3/	3/	GND	3/	3/	3/	3/	3/	3/	3/	3/	Q		3/	
8	Same tests, terminal conditions, and limits as subgroup 7, except T_C = +125ºC and -55ºC.																						
9 T_C = 25°C	t_{AVQV}	GALPAT Fig. 5	47	4/	4/	4/	4/	4/	4/	5/	GND	4/	4/	4/	4/	4/	4/	4/	4/	Q		70	ns
	t_{SVQV}	"	48	"	"	"	"	"	"	"	"	"	"	"	"	"	"	"	"	"		45	"
	t_{SCQZ}	"	49	"	"	"	"	"	"	"	"	"	"	"	"	"	"	"	"	"		50	"
	t_{WLQZ}	"	50	"	"	"	"	"	"	"	"	"	"	"	"	"	"	"	"	"		45	"
	t_{WHQV}	"	51	"	"	"	"	"	"	"	"	"	"	"	"	"	"	"	"	"		55	"
	t_{WLWH}	GGII Fig. 5	52	6/	6/	6/	6/	6/	6/	"	"	6/	6/	6/	6/	6/	6/	6/	6/	"	50		"
	t_{WHDC}	"	53	"	"	"	"	"	"	"	"	"	"	"	"	"	"	"	"	"	10		"
	t_{DCWL}	"	54	"	"	"	"	"	"	"	"	"	"	"	"	"	"	"	"	"	10		"
	t_{AVWL}	"	55	"	"	"	"	"	"	"	"	"	"	"	"	"	"	"	"	"	10		"
	t_{WHAC}	"	56	"	"	"	"	"	"	"	"	"	"	"	"	"	"	"	"	"	10		"
	t_{SVWL}	"	57	"	"	"	"	"	"	"	"	"	"	"	"	"	"	"	"	"	10		"
	t_{WHSC}	"	58	"	"	"	"	"	"	"	"	"	"	"	"	"	"	"	"	"	10		"
10	Same tests, terminal conditions, and limits as for subgroup 9, except T_C = 125°C.																						
11	Same tests, terminal conditions, and limits as for subgroup 9, except T_C = -55°C.																						

See footnotes at end of table.

TABLE III. Group A inspection for device type 07.

Terminal conditions (pins not designated may be high ≥2.1 V or low ≤0.8 V, or open or GND)

Subgroup	Symbol	MIL-STD-883 method	Case E, F Test No.	1 $\overline{CS}$	2 A0	3 A1	4 A2	5 A3	6 A4	7 Q	8 GND	9 A5	10 A6	11 A7	12 A8	13 A9	14 $\overline{WE}$	15 D_{IN}	16 V_{CC}	Meas. terminal	Test limits Min	Max	Unit
1 T_C = 25°C	V_{IC}		1	-10 mA							GND								5.5 V	$\overline{CS}$		-1.5	V
			2		-10 mA						"								"	A0		"	"
			3			-10 mA					"								"	A1		"	"
			4				-10 mA				"								"	A2		"	"
			5					-10 mA			"								"	A3		"	"
			6						-10 mA		"								"	A4		"	"
			7								"	-10 mA							"	A5		"	"
			8								"		-10 mA						"	A6		"	"
			9								"			-10 mA					"	A7		"	"
			10								"				-10 mA				"	A8		"	"
			11								"					-10 mA			"	A9		"	"
			12								"						-10 mA		"	$\overline{WE}$		"	"
			13								"							-10 mA	"	D_{IN}		"	"
	I_{IL}	3009	14	0.45 V							"								"	$\overline{CS}$	-1.0	-400	µA
			15		0.45 V						"								"	A0	"	"	"
			16			0.45 V					"								"	A1	"	"	"
			17				0.45 V				"								"	A2	"	"	"
			18					0.45 V			"								"	A3	"	"	"
			19						0.45 V		"								"	A4	"	"	"
			20								"	0.45 V							"	A5	"	"	"
			21								"		0.45 V						"	A6	"	"	"
			22								"			0.45 V					"	A7	"	"	"
			23								"				0.45 V				"	A8	"	"	"
			24								"					0.45 V			"	A9	"	"	"
			25								"						0.45 V		"	$\overline{WE}$	"	"	"
			26								"							0.45 V	"	D_{IN}	"	"	"
	I_{IH1}	3010	27	5.5 V							"								"	$\overline{CS}$		40	"
			28		5.5 V						"								"	A0		"	"
			29			5.5 V					"								"	A1		"	"
			30				5.5 V				"								"	A2		"	"
			31					5.5 V			"								"	A3		"	"
			32						5.5 V		"								"	A4		"	"
			33								"	5.5 V							"	A5		"	"
			34								"		5.5 V						"	A6		"	"
			35								"			5.5 V					"	A7		"	"
			36								"				5.5 V				"	A8		"	"
			37								"					5.5 V			"	A9		"	"
			38								"						5.5 V		"	$\overline{WE}$		"	"
			39								"							5.5 V	"	D_{IN}		"	"
	I_{CEX}	"	40							4.5 V	"								"	Q		100	µA
	I_{CC}	3005	41	GND	GND	GND	GND	GND	GND		"	GND	GND	GND	GND	GND	GND	GND	"	V_{CC}		1/	mA
	V_{OL}	3007	42	0.8 V	0.8 V	0.8 V	0.8 V	0.8 V	0.8 V	16 mA	"	0.8 V	0.8 V	0.8 V	0.8 V	0.8 V	2/	0.8 V	4.5 V	Q		0.45	V
2	Same tests, terminal conditions, and limits as for subgroup 1, except T_C = 125ºC and V_{IC} tests are omitted.																						
3	Same tests, terminal conditions, and limits as for subgroup 1, except T_C = -55ºC and V_{IC} tests are omitted.																						

See footnotes at end of table

TABLE III. Group A inspection for device types 07 – Continued.

Terminal conditions (pins not designated may be high ≥2.1 V or low ≤0.8 V, or open or GND)

Subgroup	Symbol	MIL-STD-883 method	Case E, F Test No.	1 $\overline{CS}$	2 A0	3 A1	4 A2	5 A3	6 A4	7 Q	8 GND	9 A5	10 A6	11 A7	12 A8	13 A9	14 $\overline{WE}$	15 D_{IN}	16 V_{CC}	Meas. terminal	Test limits Min	Max	Unit
7 T_C = 25°C	Functional tests	3014	43	3/	3/	3/	3/	3/	3/	3/	GND	3/	3/	3/	3/	3/	3/	3/	3/	Q		3/	
8	Same tests, terminal conditions, and limits as subgroup 7, except T_C = +125ºC and -55ºC.																						
9 T_C = 25°C	t_{AVQV}	GALPAT Fig. 5	44	4/	4/	4/	4/	4/	4/	5/	GND	4/	4/	4/	4/	4/	4/	4/	4/	Q		45	ns
	t_{SVQV}	"	45	"	"	"	"	"	"	"	"	"	"	"	"	"	"	"	"	"		35	"
	t_{SCQZ}	"	46	"	"	"	"	"	"	"	"	"	"	"	"	"	"	"	"	"		35	"
	t_{WLQV}	"	47	"	"	"	"	"	"	"	"	"	"	"	"	"	"	"	"	"		35	"
	t_{WHQV}	"	48	"	"	"	"	"	"	"	"	"	"	"	"	"	"	"	"	"		40	"
	t_{WLWH}	GGII Fig. 5	49	6/	6/	6/	6/	6/	6/	"	"	6/	6/	6/	6/	6/	6/	6/	6/	"	35		"
	t_{WHDC}	"	50	"	"	"	"	"	"	"	"	"	"	"	"	"	"	"	"	"	5		"
	t_{DCWL}	"	51	"	"	"	"	"	"	"	"	"	"	"	"	"	"	"	"	"	5		"
	t_{ACWL}	"	52	"	"	"	"	"	"	"	"	"	"	"	"	"	"	"	"	"	5		"
	t_{AVWL}	"	53	"	"	"	"	"	"	"	"	"	"	"	"	"	"	"	"	"	5		"
	t_{WHAC}	"	54	"	"	"	"	"	"	"	"	"	"	"	"	"	"	"	"	"	5		"
	t_{SVWL}	"	55	"	"	"	"	"	"	"	"	"	"	"	"	"	"	"	"	"	5		"
	t_{WHSC}	"	56	"	"	"	"	"	"	"	"	"	"	"	"	"	"	"	"	"	5		"
10	Same tests, terminal conditions, and limits as subgroup 9, except T_C = 125°C.																						
11	Same tests, terminal conditions, and limits as subgroup 9, except T_C = -55°C.																						

See footnotes at end of table.

TABLE III. Group A inspection for device type 08.

Terminal conditions (pins not designated may be high ≥2.1 V or low ≤0.8 V, or open or GND)

Subgroup	Symbol	MIL-STD-883 method	Case E, F Test No.	1 $\overline{CS}$	2 A0	3 A1	4 A2	5 A3	6 A4	7 Q	8 GND	9 A5	10 A6	11 A7	12 A8	13 A9	14 $\overline{WE}$	15 D_{IN}	16 V_{CC}	Meas. terminal	Test limits Min	Max	Unit
1	V_{IC}		1	-10 mA							GND								5.5 V	$\overline{CS}$		-1.5	V
T_C = 25°C			2		-10 mA						"								"	A0		"	"
			3			-10 mA					"								"	A1		"	"
			4				-10 mA				"								"	A2		"	"
			5					-10 mA			"								"	A3		"	"
			6						-10 mA		"								"	A4		"	"
			7								"	-10 mA							"	A5		"	"
			8								"		-10 mA						"	A6		"	"
			9								"			-10 mA					"	A7		"	"
			10								"				-10 mA				"	A8		"	"
			11								"					-10 mA			"	A9		"	"
			12								"						-10 mA		"	$\overline{WE}$		"	"
			13								"							-10 mA	"	D_{IN}		"	"
	I_{IL}	3009	14	0.45 V							"								"	$\overline{CS}$	-1.0	-400	µA
			15		0.45 V						"								"	A0	"	"	"
			16			0.45 V					"								"	A1	"	"	"
			17				0.45 V				"								"	A2	"	"	"
			18					0.45 V			"								"	A3	"	"	"
			19						0.45 V		"								"	A4	"	"	"
			20								"	0.45 V							"	A5	"	"	"
			21								"		0.45 V						"	A6	"	"	"
			22								"			0.45 V					"	A7	"	"	"
			23								"				0.45 V				"	A8	"	"	"
			24								"					0.45 V			"	A9	"	"	"
			25								"						0.45 V		"	$\overline{WE}$	"	"	"
			26								"							0.45 V	"	D_{IN}	"	"	"
	I_{IH1}	3010	27	5.5 V							"								"	$\overline{CS}$		40	"
			28		5.5 V						"								"	A0		"	"
			29			5.5 V					"								"	A1		"	"
			30				5.5 V				"								"	A2		"	"
			31					5.5 V			"								"	A3		"	"
			32						5.5 V		"								"	A4		"	"
			33								"	5.5 V							"	A5		"	"
			34								"		5.5 V						"	A6		"	"
			35								"			5.5 V					"	A7		"	"
			36								"				5.5 V				"	A8		"	"
			37								"					5.5 V			"	A9		"	"
			38								"						5.5 V		"	$\overline{WE}$		"	"
			39								"							5.5 V	"	D_{IN}		"	"
	I_{OS}	3011	40	GND	GND	GND	GND	GND	GND	GND	"	GND	GND	GND	GND	GND	2/	5.5 V	"	Q	-20	-100	mA
	I_{CC}	3005	41	GND	GND	GND	GND	GND	GND		"	GND	GND	GND	GND	GND	GND	GND	"	V_{CC}		1/	mA
	I_{OHZ}		42	0.4 V	0.4 V	0.4 V	0.4 V	0.4 V	0.4 V	2.4 V	"	0.4 V	0.4 V	0.4 V	0.4 V	0.4 V	0.4 V	0.4 V	"	Q		50	µA
	I_{OLZ}		43	0.4 V	0.4 V	0.4 V	0.4 V	0.4 V	0.4 V	0.45 V	"	0.4 V	0.4 V	0.4 V	0.4 V	0.4 V	0.4 V	0.4 V	"	Q		-50	µA
	V_{OL}	3007	44	0.8 V	0.8 V	0.8 V	0.8 V	0.8 V	0.8 V	16 mA	"	0.8 V	0.8 V	0.8 V	0.8 V	0.8 V	2/	0.4 V	4.5 V	Q		0.45	V
	V_{OH}	3006	45	0.8 V	0.8 V	0.8 V	0.8 V	0.8 V	0.8 V	-5.2 mA	"	0.8 V	0.8 V	0.8 V	0.8 V	0.8 V	2/	2.1 V	4.5 V	Q	2.4		V
2	Same tests, terminal conditions, and limits as for subgroup 1, except T_C = 125ºC and V_{IC} tests are omitted.																						
3	Same tests, terminal conditions, and limits as for subgroup 1, except T_C = -55ºC and V_{IC} tests are omitted.																						

See footnotes at end of table.

TABLE III. Group A inspection for device types 08 – Continued.

Terminal conditions (pins not designated may be high ≥2.1 V or low ≤0.8 V, or open or GND)

Subgroup	Symbol	MIL-STD-883 method	Case E, F Test No.	1 $\overline{CS}$	2 A0	3 A1	4 A2	5 A3	6 A4	7 Q	8 GND	9 A5	10 A6	11 A7	12 A8	13 A9	14 $\overline{WE}$	15 D_{IN}	16 V_{CC}	Meas. terminal	Test limits Min	Max	Unit
7 T_C = 25°C	Functional tests	3014	46	3/	3/	3/	3/	3/	3/	3/	GND	3/	3/	3/	3/	3/	3/	3/	3/	Q		3/	
8	Same tests, terminal conditions, and limits as subgroup 7, except T_C = 125ºC and -55ºC.																						
9 T_C = 25°C	t_{AVQV}	GALPAT Fig. 5	47	4/	4/	4/	4/	4/	4/	5/	GND	4/	4/	4/	4/	4/	4/	4/	4/	Q		45	ns
	t_{SVQV}	"	48	"	"	"	"	"	"	"	"	"	"	"	"	"	"	"	"	"		35	"
	t_{SCQZ}	"	49	"	"	"	"	"	"	"	"	"	"	"	"	"	"	"	"	"		35	"
	t_{WLQZ}	"	50	"	"	"	"	"	"	"	"	"	"	"	"	"	"	"	"	"		35	"
	t_{WHQV}	"	51	"	"	"	"	"	"	"	"	"	"	"	"	"	"	"	"	"		40	"
	t_{WLWH}	GGII Fig. 5	52	6/	6/	6/	6/	6/	6/	"	"	6/	6/	6/	6/	6/	6/	6/	6/	"	35		"
	t_{WHDC}	"	53	"	"	"	"	"	"	"	"	"	"	"	"	"	"	"	"	"	5		"
	t_{DCWL}	"	54	"	"	"	"	"	"	"	"	"	"	"	"	"	"	"	"	"	5		"
	t_{AVWL}	"	55	"	"	"	"	"	"	"	"	"	"	"	"	"	"	"	"	"	5		"
	t_{WHAC}	"	56	"	"	"	"	"	"	"	"	"	"	"	"	"	"	"	"	"	5		"
	t_{SVWL}	"	57	"	"	"	"	"	"	"	"	"	"	"	"	"	"	"	"	"	5		"
	t_{WHSC}	"	58	"	"	"	"	"	"	"	"	"	"	"	"	"	"	"	"	"	5		"
10	Same tests, terminal conditions, and limits as for subgroup 9, except T_C = 125°C.																						
11	Same tests, terminal conditions, and limits as for subgroup 9, except T_C = -55°C.																						

See footnotes at end of table.

TABLE III. Group A inspection for device type 09.

Terminal conditions (pins not designated may be high ≥2.1 V or low ≤0.8 V, or open or GND)

Subgroup	Symbol	MIL-STD-883 method	Case W	1	2	3	4	5	6	7	8	9	10	11	Meas. terminal	Test limits		
			Case X and K	1	2	3	4	5	6	7	8	9	10	11				
			Case Y	1	2	3	4	5	7	8	9	10	11	12				
			Test No.	A3	A2	A1	A0	A5	A6	A7	GND	D1	Q1	D2		Min	Max	Unit
1	V_{IC}		1	-10 mA							GND				A3		-1.5	V
T_C = 25°C			2		-10 mA						"				A2		"	"
			3			-10 mA					"				A1		"	"
			4				-10 mA				"				A0		"	"
			5					-10 mA			"				A5		"	"
			6						-10 mA		"				A6		"	"
			7							-10 mA	"				A7		"	"
			8								"	-10 mA			D1		"	"
			9								"			-10 mA	D2		"	"
			10								"				D3		"	"
			11								"				D4		"	"
			12								"				CS2		"	"
			13								"				$\overline{OE}$		"	"
			14								"				$\overline{CS\ 1}$		"	"
			15								"				$\overline{WE}$		"	"
			16								"				A4		"	"
	I_{IL}	3009	17	0.45 V							"				A3	-10	-300	μA
			18		0.45 V						"				A2	"	"	"
			19			0.45 V					"				A1	"	"	"
			20				0.45 V				"				A0	"	"	"
			21					0.45 V			"				A5	"	"	"
			22						0.45 V		"				A6	"	"	"
			23							0.45 V	"				A7	"	"	"
			24								"	0.45 V			D1	"	"	"
			25								"			0.45 V	D2	"	"	"
			26								"				D3	"	"	"
			27								"				D4	"	"	"
			28								"				CS2	"	"	"
			29								"				$\overline{OE}$	"	"	"
			30								"				$\overline{CS\ 1}$	"	"	"
			31								"				$\overline{WE}$	"	"	"
			32								"				A4	"	"	"
	I_{IH1}	3010	33	5.5 V							"				A3		40	"
			34		5.5 V						"				A2		"	"
			35			5.5 V					"				A1		"	"
			36				5.5 V				"				A0		"	"
			37					5.5 V			"				A5		"	"
			38						5.5 V		"				A6		"	"
			39							5.5 V	"				A7		"	"
			40								"	5.5 V			D1		"	"
			41								"			5.5 V	D2		"	"
			42								"				D3		"	"
			43								"				D4		"	"
			44								"				CS2		"	"
			45								"				$\overline{OE}$		"	"
			46								"				$\overline{CS\ 1}$		"	"
			47								"				$\overline{WE}$		"	"
			48								"				A4		"	"
	I_{CEX}	3010	49								"	5.5 V	4.5 V		Q1		100	"
			50								"			5.5 V	Q2		"	"
			51								"				Q3		"	"
			52								"				Q4		"	"

See footnotes at end of table.

TABLE III. Group A inspection for device type 09.

Terminal conditions (pins not designated may be high ≥2.1 V or low ≤0.8 V, or open or GND)

Subgroup	Symbol	MIL-STD-883 method	Case W	12	13	14	15	16	17	18	19	20	21	22	Meas. terminal	Test limits		
			Case X and K	14	15	16	17	18	19	20	21	22	23	24				
			Case Y	13	14	15	16	17	19	20	21	22	23	24				
			Test No.	Q2	D3	Q3	D4	Q4	CS2	$\overline{OE}$	$\overline{CS\ 1}$	$\overline{WE}$	A4	V_{CC}		Min	Max	Unit
1 T_C = 25°C	V_{IC}		1											5.5 V	A3		-1.5	V
			2											"	A2		"	"
			3											"	A1		"	"
			4											"	A0		"	"
			5											"	A5		"	"
			6											"	A6		"	"
			7											"	A7		"	"
			8											"	D1		"	"
			9											"	D2		"	"
			10		-10 mA									"	D3		"	"
			11				-10 mA							"	D4		"	"
			12						-10 mA					"	CS2		"	"
			13							-10 mA				"	$\overline{OE}$		"	"
			14								-10 mA			"	$\overline{CS\ 1}$		"	"
			15									-10 mA		"	$\overline{WE}$		"	"
			16										-10 mA	"	A4		"	"
	I_{IL}	3009	17											"	A3	-10	-300	μA
			18											"	A2	"	"	"
			19											"	A1	"	"	"
			20											"	A0	"	"	"
			21											"	A5	"	"	"
			22											"	A6	"	"	"
			23											"	A7	"	"	"
			24											"	D1	"	"	"
			25											"	D2	"	"	"
			26		0.45 V									"	D3	"	"	"
			27				0.45 V							"	D4	"	"	"
			28						0.45 V					"	CS2	"	"	"
			29							0.45 V				"	$\overline{OE}$	"	"	"
			30								0.45 V			"	$\overline{CS\ 1}$	"	"	"
			31									0.45 V		"	$\overline{WE}$	"	"	"
			32										0.45 V	"	A4	"	"	"
	I_{IH1}	3010	33											"	A3		40	"
			34											"	A2		"	"
			35											"	A1		"	"
			36											"	A0		"	"
			37											"	A5		"	"
			38											"	A6		"	"
			39											"	A7		"	"
			40											"	D1		"	"
			41											"	D2		"	"
			42		5.5 V									"	D3		"	"
			43				5.5 V							"	D4		"	"
			44						5.5 V					"	CS2		"	"
			45							5.5 V				"	$\overline{OE}$		"	"
			46								5.5 V			"	$\overline{CS\ 1}$		"	"
			47									5.5 V		"	$\overline{WE}$		"	"
			48										5.5 V	"	A4		"	"
	I_{CEX}	3010	49											"	Q1		100	"
			50	4.5 V										"	Q2		"	"
			51		5.5 V	4.5 V								"	Q3		"	"
			52				5.5 V	4.5 V						"	Q4		"	"

See footnotes at end of table.

TABLE III. Group A inspection for device type 09 – Continued.

Terminal conditions (pins not designated may be high ≥2.1 V or low ≤0.8 V, or open or GND)

Subgroup	Symbol	MIL-STD-883 method	Case W	1	2	3	4	5	6	7	8	9	10	11	Meas. terminal	Test limits		
			Case X and K	1	2	3	4	5	6	7	8	9	10	11				
			Case Y	1	2	3	4	5	7	8	9	10	11	12				
			Test No.	A3	A2	A1	A0	A5	A6	A7	GND	D1	Q1	D2		Min	Max	Unit
1 T_C = 25°C	V_{OL}	3007	53								GND	GND	8 mA	GND	Q1		.45	V
			54								"	"	GND	"	Q2		"	"
			55								"	"	GND	"	Q3		"	"
			56								"	"	GND	"	Q4		"	"
	I_{CC}	3005	57	GND	GND	GND	GND	GND	GND	GND	"	GND		GND	V_{CC}		1/	mA
2	Same tests, terminal conditions, and limits as for subgroup 1, except T_C = 125ºC.																	
3	Same tests, terminal conditions, and limits as for subgroup 1, except T_C = -55ºC.																	
7 T_C = 25°C	Functional tests	3014	58		3/	3/	3/	3/	3/	3/	GND	3/	3/	3/	Q			
8	Same tests, terminal conditions, and limits as subgroup 7, except T_C = -55ºC and +125°C.																	
9 T_C = 25°C	t_{AVQV}	Fig. 5	59	4/	4/	4/	4/	4/	4/	4/	GND	4/	5/	4/	Q		60	ns
	t_{SVQV}	"	60	"	"	"	"	"	"	"	"	"	"	"	"		45	"
	t_{SCQZ}	"	61	"	"	"	"	"	"	"	"	"	"	"	"		45	"
	t_{WLQV}	"	62	"	"	"	"	"	"	"	"	"	"	"	"		45	"
	t_{WHQV}	"	63	"	"	"	"	"	"	"	"	"	"	"	"		50	"
	t_{WLWH}	"	64	6/	6/	6/	6/	6/	6/	6/	"	6/	"	6/	"	40		"
	t_{WHDC}	"	65	"	"	"	"	"	"	"	"	"	"		"	5		"
	t_{DCWL}	"	66	"	"	"	"	"	"	"	"	"	"	"	"	5		"
	t_{AVWL}	"	67	"	"	"	"	"	"	"	"	"	"	"	"	10		"
	t_{WHAC}	"	68	"	"	"	"	"	"	"	"	"	"	"	"	10		"
	t_{SVWL}	"	69	"	"	"	"	"	"	"	"	"	"	"	"	5		"
	t_{WHSC}	"	70	"	"	"	"	"	"	"	"	"	"	"	"	5		"
10	Same tests, terminal conditions, and limits as subgroup 9, except T_C = -55°C.																	
11	Same tests, terminal conditions, and limits as subgroup 10, except T_C = 125°C.																	

See footnotes at end of table.

TABLE III. Group A inspection for device type 09 – Continued.

Terminal conditions (pins not designated may be high ≥2.1 V or low ≤0.8 V, or open or GND)

Subgroup	Symbol	MIL-STD-883 method	Case W	12	13	14	15	16	17	18	19	20	21	22	Meas. terminal	Test limits		
			Case X and K	14	15	16	17	18	19	20	21	22	23	24				
			Case Y	13	14	15	16	17	19	20	21	22	23	24				
			Test No.	Q2	D3	Q3	D4	Q4	CS2	$\overline{OE}$	$\overline{CS}$ 1	$\overline{WE}$	A4	V_{CC}		Min	Max	Unit
1 T_C = 25°C	V_{OL}	3007	53	GND	GND	GND	GND	GND	4.5 V	GND	GND	2/		4.5 V	Q1		.45	V
	"	"	54	8 mA	"	GND	"	GND	"	"	"	"		"	Q2		"	"
	"	"	55	GND	"	8 mA	"	GND	"	"	"	"		"	Q3		"	"
	"	"	56	GND	"	GND	"	8 mA	"	"	"	"		"	Q4		"	"
	I_{CC}	3005	57		GND		GND		GND	GND	GND	GND	GND	5.5 V	V_{CC}		1/	mA
2	Same tests, terminal conditions, and limits as subgroup 1, except T_C = 125ºC.																	
3	Same tests, terminal conditions, and limits as subgroup 1, except T_C = -55ºC.																	
7 T_C = 25°C	Functional tests	3014	58	3/	3/	3/	3/	3/	3/	3/	3/	3/	3/	3/	Q			
8	Same tests, terminal conditions, and limits as subgroup 7, except T_C = -55ºC and +125°C.																	
9 T_C = 25°C	t_{AVQV}	Fig. 5	59	5/	4/	5/	4/	5/	4/	4/	4/	4/	4/	4/	Q		60	ns
	t_{SVQV}	"	60	"	"	"	"	"	"	"	"	"	"	"	"		45	"
	t_{SCQZ}	"	61	"	"	"	"	"	"	"	"	"	"	"	"		45	"
	t_{WLQV}	"	62	"	"	"	"	"	"	"	"	"	"	"	"		45	"
	t_{WHQV}	"	63	"	"	"	"	"	"	"	"	"	"	"	"		50	"
	t_{WLWH}	"	64	"	6/	"	6/	"	6/	6/	6/	6/	6/	6/	"	40		"
	t_{WHDC}	"	65	"	"	"	"	"	"	"	"	"	"		"	5		"
	t_{DCWL}	"	66	"	"	"	"	"	"	"	"	"	"	"	"	5		"
	t_{AVWL}	"	67	"	"	"	"	"	"	"	"	"	"	"	"	10		"
	t_{WHAC}	"	68	"	"	"	"	"	"	"	"	"	"	"	"	10		"
	t_{SVWL}	"	69	"	"	"	"	"	"	"	"	"	"	"	"	5		"
	t_{WHSC}	"	70	"	"	"	"	"	"	"	"	"	"	"	"	5		"
10	Same tests, terminal conditions, and limits as subgroup 9, except T_C = -55°C.																	
11	Same tests, terminal conditions, and limits as subgroup 9, except T_C = 125°C.																	

See footnotes at end of table.

TABLE III. Group A inspection for device type 10.

Terminal conditions (pins not designated may be high ≥2.1 V or low ≤0.8 V, or open or GND)

Subgroup	Symbol	MIL-STD-883 method	Case W	1	2	3	4	5	6	7	8	9	10	11	Meas. terminal	Test limits		
			Case X and K	1	2	3	4	5	6	7	8	9	10	11				
			Case Y	1	2	3	4	5	7	8	9	10	11	12				
			Test No.	A3	A2	A1	A0	A5	A6	A7	GND	D1	Q1	D2		Min	Max	Unit
1 T_C = 25°C	V_{IC}		1	-10 mA							GND				A3		-1.5	V
			2		-10 mA						"				A2		"	"
			3			-10 mA					"				A1		"	"
			4				-10 mA				"				A0		"	"
			5					-10 mA			"				A5		"	"
			6						-10 mA		"				A6		"	"
			7							-10 mA	"				A7		"	"
			8								"	-10 mA			D1		"	"
			9								"			-10 mA	D2		"	"
			10								"				D3		"	"
			11								"				D4		"	"
			12								"				CS2		"	"
			13								"				$\overline{OE}$		"	"
			14								"				$\overline{CS\ 1}$		"	"
			15								"				$\overline{WE}$		"	"
			16								"				A4		"	"
	I_{IL}	3009	17	0.45 V							"				A3	-10	-300	µA
			18		0.45 V						"				A2	"	"	"
			19			0.45 V					"				A1	"	"	"
			20				0.45 V				"				A0	"	"	"
			21					0.45 V			"				A5	"	"	"
			22						0.45 V		"				A6	"	"	"
			23							0.45 V	"				A7	"	"	"
			24								"	0.45 V			D1	"	"	"
			25								"			0.45 V	D2	"	"	"
			26								"				D3	"	"	"
			27								"				D4	"	"	"
			28								"				CS2	"	"	"
			29								"				$\overline{OE}$	"	"	"
			30								"				$\overline{CS\ 1}$	"	"	"
			31								"				$\overline{WE}$	"	"	"
			32								"				A4	"	"	"
	I_{IH1}	3010	33	5.5 V							"				A3		40	"
			34		5.5 V						"				A2		"	"
			35			5.5 V					"				A1		"	"
			36				5.5 V				"				A0		"	"
			37					5.5 V			"				A5		"	"
			38						5.5 V		"				A6		"	"
			39							5.5 V	"				A7		"	"
			40								"	5.5 V			D1		"	"
			41								"			5.5 V	D2		"	"
			42								"				D3		"	"
			43								"				D4		"	"
			44								"				CS2		"	"
			45								"				$\overline{OE}$		"	"
			46								"				$\overline{CS\ 1}$		"	"
			47								"				$\overline{WE}$		"	"
			48								"				A4		"	"
	I_{OHZ}		49								"	0.4 V	2.4 V		Q1	-50	50	"
			50								"			0.4 V	Q2	"	"	"
			51								"				Q3	"	"	"
			52								"				Q4	"	"	"

See footnotes at end of table

TABLE III. Group A inspection for device type 10 – Continued.

Terminal conditions (pins not designated may be high ≥2.1 V or low ≤0.8 V, or open or GND)

Subgroup	Symbol	MIL-STD-883 method	Case W	12	13	14	15	16	17	18	19	20	21	22	Meas. terminal	Test limits		
			Case X and K	14	15	16	17	18	19	20	21	22	23	24				
			Case Y	13	14	15	16	17	19	20	21	22	23	24				
			Test No.	Q2	D3	Q3	D4	Q4	CS2	$\overline{OE}$	$\overline{CS}$ 1	$\overline{WE}$	A4	V_{CC}		Min	Max	Unit
1 T_C = 25°C	V_{IC}		1											5.5 V	A3		-1.5	V
			2											"	A2		"	"
			3											"	A1		"	"
			4											"	A0		"	"
			5											"	A5		"	"
			6											"	A6		"	"
			7											"	A7		"	"
			8											"	D1		"	"
			9											"	D2		"	"
			10		-10 mA									"	D3		"	"
			11				-10 mA							"	D4		"	"
			12						-10 mA					"	CS2		"	"
			13							-10 mA				"	$\overline{OE}$		"	"
			14								-10 mA			"	$\overline{CS}$ 1		"	"
			15									-10 mA		"	$\overline{WE}$		"	"
			16										-10 mA	"	A4		"	"
	I_{IL}	3009	17											"	A3	-10	-300	µA
			18											"	A2	"	"	"
			19											"	A1	"	"	"
			20											"	A0	"	"	"
			21											"	A5	"	"	"
			22											"	A6	"	"	"
			23											"	A7	"	"	"
			24											"	D1	"	"	"
			25											"	D2	"	"	"
			26		0.45 V									"	D3	"	"	"
			27				0.45 V							"	D4	"	"	"
			28						0.45 V					"	CS2	"	"	"
			29							0.45 V				"	$\overline{OE}$	"	"	"
			30								0.45 V			"	$\overline{CS}$ 1	"	"	"
			31									0.45 V		"	$\overline{WE}$	"	"	"
			32										0.45 V	"	A4	"	"	"
	I_{IH1}	3010	33											"	A3		40	"
			34											"	A2		"	"
			35											"	A1		"	"
			36											"	A0		"	"
			37											"	A5		"	"
			38											"	A6		"	"
			39											"	A7		"	"
			40											"	D1		"	"
			41											"	D2		"	"
			42		5.5 V									"	D3		"	"
			43				5.5 V							"	D4		"	"
			44						5.5 V					"	CS2		"	"
			45							5.5 V				"	$\overline{OE}$		"	"
			46								5.5 V			"	$\overline{CS}$ 1		"	"
			47									5.5 V		"	$\overline{WE}$		"	"
			48										5.5 V	"	A4		"	"
	I_{OHZ}		49						5.5 V	5.5 V	GND			"	Q1	-50	50	"
			50	2.4 V					"	"	"			"	Q2	"	"	"
			51		0.4 V	2.4 V			"	"	"			"	Q3	"	"	"
			52				0.4 V	2.4 V	"	"	"			"	Q4	"	"	"

See footnotes at end of table.

TABLE III. Group A inspection for device type 10 – Continued.

Terminal conditions (pins not designated may be high ≥2.1 V or low ≤0.8 V, or open or GND)

Subgroup	Symbol	MIL-STD-883 method	Case W	1	2	3	4	5	6	7	8	9	10	11	Meas. terminal	Test limits		
			Case X and K	1	2	3	4	5	6	7	8	9	10	11				
			Case Y	1	2	3	4	5	7	8	9	10	11	12				
			Test No.	A3	A2	A1	A0	A5	A6	A7	GND	D1	Q1	D2		Min	Max	Unit
1 T_C = 25°C	I_{OLZ}	3010	53								GND	0.4 V	.45		Q1	-50	50	µA
			54								"			0.4 V	Q2	"	"	"
			55								"				Q3	"	"	"
			56								"				Q4	"	"	"
	V_{OL}	3007	57								"	0.8 V	8 mA		Q1		.45	V
			58								"			0.8 V	Q2		"	"
			59								"				Q3		"	"
			60								"				Q4		"	"
	V_{OH}	3006	61								"	2.1 V	-5.2 mA		Q1	2.4		V
			62								"			2.1 V	Q2	"		"
			63								"				Q3	"		"
			64								"				Q4	"		"
	I_{OS}		65	GND	GND	GND	GND	GND	GND	GND	"	5.5 V	GND		Q1	-10	-70	mA
			66	"	"	"	"	"	"	"	"			5..5 V	Q2	"	"	"
			67	"	"	"	"	"	"	"	"				Q3	"	"	"
			68	"	"	"	"	"	"	"	"				Q4	"	"	"
	I_{CC}	3005	69	GND	GND	GND	GND	GND	GND	GND	GND	GND		GND	V_{CC}		1/	
2	Same tests, terminal conditions, and limits as for subgroup 1, except T_C = 125ºC.																	
3	Same tests, terminal conditions, and limits as for subgroup 1, except T_C = -55ºC.																	
7 T_C = 25°C	Functional tests	3014	70	3/	3/	3/	3/	3/	3/	3/	GND	3/	3/	3/	Q			
8	Same tests, terminal conditions, and limits as subgroup 7, except T_C = -55ºC and +125°C.																	
9 T_C = 25°C	t_{AVQV}	Fig. 5	71	4/	4/	4/	4/	4/	4/	4/	GND	4/	5/	4/	Q		60	ns
	t_{SVQV}		72	"	"	"	"	"	"	"	"	"	"	"	"		45	"
	t_{SCQZ}		73	"	"	"	"	"	"	"	"	"	"	"	"		45	"
	t_{WLQZ}		74	"	"	"	"	"	"	"	"	"	"	"	"		45	"
	t_{WHQV}		75	"	"	"	"	"	"	"	"	"	"	"	"		50	"
	t_{WLWH}		76	6/	6/	6/	6/	6/	6/	6/	"	6/	"	6/	"	40		"
	t_{WHDC}		77	"	"	"	"	"	"	"	"	"	"	"	"	5		"
	t_{DCWL}		78	"	"	"	"	"	"	"	"	"	"	"	"	5		"
	t_{AVWL}		79	"	"	"	"	"	"	"	"	"	"	"	"	10		"
	t_{WHAC}		80	"	"	"	"	"	"	"	"	"	"	"	"	10		"
	t_{SVWL}		81	"	"	"	"	"	"	"	"	"	"	"	"	5		"
	t_{WHSC}		82	"	"	"	"	"	"	"	"	"	"	"	"	5		"
10	Same tests, terminal conditions, and limits as subgroup 9, except T_C = 125°C.																	
11	Same tests, terminal conditions, and limits as subgroup 9, except T_C = -55°C.																	

See footnotes at end of table.

TABLE III. Group A inspection for device type 10 – Continued.

Terminal conditions (pins not designated may be high ≥2.1 V or low ≤0.8 V, or open or GND)

Subgroup	Symbol	MIL-STD-883 method	Case W	12	13	14	15	16	17	18	19	20	21	22	Meas. terminal	Test limits		
			Case X and K	14	15	16	17	18	19	20	21	22	23	24				
			Case Y	13	14	15	16	17	19	20	21	22	23	24				
			Test No.	Q2	D3	Q3	D4	Q4	CS2	$\overline{OE}$	$\overline{CS}$ 1	$\overline{WE}$	A4	V_{CC}		Min	Max	Unit
1 T_C = 25°C	I_{OLZ}	3010	53						5.5 V	5.5 V	GND			5.5 V	Q1	-50	50	µA
			54	.45 V					"	"	"			"	Q2	"	"	"
			55		0.4 V	.45 V			"	"	"			"	Q3	"	"	"
			56				0.4 V	.45 V	"	"	"			"	Q4	"	"	"
	V_{OL}	3007	57						"	GND	"	2/		4.5 V	Q1		.45	V
			58	8 mA					"	"	"	"		"	Q2		"	"
			59		0.8 V	8 mA			"	"	"	"		"	Q3		"	"
			60				0.8 V	8 mA	"	"	"	"		"	Q4		"	"
	V_{OH}	3006	61						5.5 V	"	"	"		"	Q1	2.4		V
			62	-5.2 mA					"	"	"	"		"	Q2	"		"
			63		2.1 mA	-5.2 mA			"	"	"	"		"	Q3	"		"
			64				2.1 V	-5.2 mA	"	"	"	"		"	Q4	"		"
	I_{OS}		65						"	"	"	"	GND	5.5 V	Q1	-10	-70	mA
			66	GND					"	"	"	"	"	"	Q2	"	"	"
			67		5.5 V	GND			"	"	"	"	"	"	Q3	"	"	"
			68				5.5 V	GND	"	"	"	"	"	"	Q4	"	"	"
	I_{CC}	3005	69		GND		GND		GND	GND	GND	GND	GND		V_{CC}		1/	
2	Same tests, terminal conditions, and limits as for subgroup 1, except T_C = 125ºC.																	
3	Same tests, terminal conditions, and limits as for subgroup 1, except T_C = -55ºC.																	
7 T_C = 25°C	Functional tests	3014	70	3/	3/	3/	3/	3/	3/	3/	3/	3/	3/	3/	Q			
8	Same tests, terminal conditions, and limits as subgroup 7, except T_C = -55ºC and +125°C.																	
9 T_C = 25°C	t_{AVQV}	Fig. 5	71	5/	4/	5/	4/	5/	4/	4/	4/	4/	4/	4/	Q		60	ns
	t_{SVQV}		72	"	"	"	"	"	"	"	"	"	"	"	"		45	"
	t_{SCQZ}		73	"	"	"	"	"	"	"	"	"	"	"	"		45	"
	t_{WLQZ}		74	"	"	"	"	"	"	"	"	"	"	"	"		45	"
	t_{WHQV}		75	"	"	"	"	"	"	"	"	"	"	"	"		50	"
	t_{WLWH}		76	"	6/	"	6/	"	6/	6/	6/	6/	6/	6/	"	40		"
	t_{WHDC}		77	"	"	"	"	"	"	"	"	"	"	"	"	5		"
	t_{DCWL}		78	"	"	"	"	"	"	"	"	"	"	"	"	5		"
	t_{AVWL}		79	"	"	"	"	"	"	"	"	"	"	"	"	10		"
	t_{WHAC}		80	"	"	"	"	"	"	"	"	"	"	"	"	10		"
	t_{SVWL}		81	"	"	"	"	"	"	"	"	"	"	"	"	5		"
	t_{WHSC}		82	"	"	"	"	"	"	"	"	"	"	"	"	5		"
10	Same tests, terminal conditions, and limits as subgroup 9, except T_C = 125°C.																	
11	Same tests, terminal conditions, and limits as subgroup 9, except T_C = -55°C.																	

See footnotes at end of table.

TABLE III. Group A inspection for device type 11.

Terminal conditions (pins not designated may be high ≥2.1 V or low ≤0.8 V, or open or GND)

Subgroup	Symbol	MIL-STD-883 method	Case W	1	2	3	4	5	6	7	8	9	10	11	Meas. terminal	Test limits		
			Case X and K	1	2	3	4	5	6	7	8	9	10	11				
			Case Y	1	2	3	4	5	7	8	9	10	11	12				
			Test No.	A3	A2	A1	A0	A5	A6	A7	GND	D1	Q1	D2		Min	Max	Unit
1	V_{IC}		1	-10 mA							GND				A3		-1.5	V
T_C = 25°C			2		-10 mA						"				A2		"	"
			3			-10 mA					"				A1		"	"
			4				-10 mA				"				A0		"	"
			5					-10 mA			"				A5		"	"
			6						-10 mA		"				A6		"	"
			7							-10 mA	"				A7		"	"
			8								"	-10 mA			D1		"	"
			9								"			-10 mA	D2		"	"
			10								"				D3		"	"
			11								"				D4		"	"
			12								"				CS2		"	"
			13								"				$\overline{OE}$		"	"
			14								"				$\overline{CS}$ 1		"	"
			15								"				$\overline{WE}$		"	"
			16								"				A4		"	"
	I_{IL}	3009	17	0.45 V							"				A3	-10	-300	µA
			18		0.45 V						"				A2	"	"	"
			19			0.45 V					"				A1	"	"	"
			20				0.45 V				"				A0	"	"	"
			21					0.45 V			"				A5	"	"	"
			22						0.45 V		"				A6	"	"	"
			23							0.45 V	"				A7	"	"	"
			24								"	0.45 V			D1	"	"	"
			25								"			0.45 V	D2	"	"	"
			26								"				D3	"	"	"
			27								"				D4	"	"	"
			28								"				CS2	"	"	"
			29								"				$\overline{OE}$	"	"	"
			30								"				$\overline{CS}$ 1	"	"	"
			31								"				$\overline{WE}$	"	"	"
			32								"				A4	"	"	"
	I_{IH1}	3010	33	5.5 V							"				A3		40	"
			34		5.5 V						"				A2		"	"
			35			5.5 V					"				A1		"	"
			36				5.5 V				"				A0		"	"
			37					5.5 V			"				A5		"	"
			38						5.5 V		"				A6		"	"
			39							5.5 V	"				A7		"	"
			40								"	5.5 V			D1		"	"
			41								"			5.5 V	D2		"	"
			42								"				D3		"	"
			43								"				D4		"	"
			44								"				CS2		"	"
			45								"				$\overline{OE}$		"	"
			46								"				$\overline{CS}$ 1		"	"
			47								"				$\overline{WE}$		"	"
			48								"				A4		"	"
	I_{CEX}		49								"	5.5 V	4.5 V		Q1		100	"
			50								"			5.5 V	Q2		"	"
			51								"				Q3		"	"
			52								"				Q4		"	"

See footnotes at end of table.

TABLE III. Group A inspection for device type 11– Continued.

Terminal conditions (pins not designated may be high ≥2.1 V or low ≤0.8 V, or open or GND)

Subgroup	Symbol	MIL-STD-883 method	Case W	12	13	14	15	16	17	18	19	20	21	22	Meas. terminal	Test limits		
			Case X and K	14	15	16	17	18	19	20	21	22	23	24				
			Case Y	13	14	15	16	17	19	20	21	22	23	24				
			Test No.	Q2	D3	Q3	D4	Q4	CS2	$\overline{OE}$	$\overline{CS\ 1}$	$\overline{WE}$	A4	V_{CC}		Min	Max	Unit
1 T_C = 25°C	V_{IC}		1											5.5 V	A3		-1.5	V
			2											"	A2		"	"
			3											"	A1		"	"
			4											"	A0		"	"
			5											"	A5		"	"
			6											"	A6		"	"
			7											"	A7		"	"
			8											"	D1		"	"
			9											"	D2		"	"
			10		-10 mA									"	D3		"	"
			11				-10 mA							"	D4		"	"
			12						-10 mA					"	CS2		"	"
			13							-10 mA				"	$\overline{OE}$		"	"
			14								-10 mA			"	$\overline{CS\ 1}$		"	"
			15									-10 mA		"	$\overline{WE}$		"	"
			16										-10 mA	"	A4		"	"
	I_{IL}	3009	17											"	A3	-10	-300	μA
			18											"	A2	"	"	"
			19											"	A1	"	"	"
			20											"	A0	"	"	"
			21											"	A5	"	"	"
			22											"	A6	"	"	"
			23											"	A7	"	"	"
			24											"	D1	"	"	"
			25											"	D2	"	"	"
			26		0.45 V									"	D3	"	"	"
			27				0.45 V							"	D4	"	"	"
			28						0.45 V					"	CS2	"	"	"
			29							0.45 V				"	$\overline{OE}$	"	"	"
			30								0.45 V			"	$\overline{CS\ 1}$	"	"	"
			31									0.45 V		"	$\overline{WE}$	"	"	"
			32										0.45 V	"	A4	"	"	"
	I_{IH1}	3010	33											"	A3		40	"
			34											"	A2		"	"
			35											"	A1		"	"
			36											"	A0		"	"
			37											"	A5		"	"
			38											"	A6		"	"
			39											"	A7		"	"
			40											"	D1		"	"
			41											"	D2		"	"
			42		5.5 V									"	D3		"	"
			43				5.5 V							"	D4		"	"
			44						5.5 V					"	CS2		"	"
			45							5.5 V				"	$\overline{OE}$		"	"
			46								5.5 V			"	$\overline{CS\ 1}$		"	"
			47									5.5 V		"	$\overline{WE}$		"	"
			48										5.5 V	"	A4		"	"
	I_{CEX}		49											"	Q1		100	"
			50	4.5 V										"	Q2		"	"
			51		5.5 V	4.5 V								"	Q3		"	"
			52				5.5 V	4.5 V						"	Q4		"	"

See footnotes at end of table.

TABLE III. Group A inspection for device type 11 - Continued

Terminal conditions (pins not designated may be high ≥2.1 V or low ≤0.8 V, or open or GND)

Subgroup	Symbol	MIL-STD-883 method	Case W	1	2	3	4	5	6	7	8	9	10	11	Meas. terminal	Test limits		
			Case X and K	1	2	3	4	5	6	7	8	9	10	11				
			Case Y	1	2	3	4	5	7	8	9	10	11	12				
			Test No.	A3	A2	A1	A0	A5	A6	A7	GND	D1	Q1	D2		Min	Max	Unit
1 T_C = 25°C	V_{OL}	3007	53								GND	GND	8 mA	GND	Q1		.45	V
			54								"	"	GND	"	Q2		"	"
			55								"	"	GND	"	Q3		"	"
			56								"	"	GND	"	Q4		"	"
	I_{CC}	3005	57	GND	GND	GND	GND	GND	GND	GND	GND	GND		GND	V_{CC}		1/	mA
2	Same tests, terminal conditions, and limits as subgroup 1, except T_C = 125ºC.																	
3	Same tests, terminal conditions, and limits as subgroup 1, except T_C = -55ºC, and I_{CC} (max) limit = 90 mA.																	
7 T_C = 25°C	Functional tests	3014	58		3/	3/	3/	3/	3/	3/	GND	3/	3/	3/	Q			
8	Same tests, terminal conditions, and limits as subgroup 7, except T_C = 125°C and -55ºC.																	
9 T_C = 25°C	t_{AVQV}	Fig. 5	59	4/	4/	4/	4/	4/	4/	4/	GND	4/	5/	4/	Q		75	ns
	t_{SVQV}		60	"	"	"	"	"	"	"	"	"	"	"	"		45	"
	t_{SCQZ}		61	"	"	"	"	"	"	"	"	"	"	"	"		45	"
	t_{WLQV}		62	"	"	"	"	"	"	"	"	"	"	"	"		45	"
	t_{WHQV}		63	"	"	"	"	"	"	"	"	"	"	"	"		50	"
	t_{WLWH}		64	6/	6/	6/	6/	6/	6/	6/	"	6/	"	6/	"	55		"
	t_{WHDC}		65	"	"	"	"	"	"	"	"	"	"	"	"	5		"
	t_{DCWL}		66	"	"	"	"	"	"	"	"	"	"	"	"	5		"
	t_{AVWL}		67	"	"	"	"	"	"	"	"	"	"	"	"	10		"
	t_{WHAC}		68	"	"	"	"	"	"	"	"	"	"	"	"	10		"
	t_{SVWL}		69	"	"	"	"	"	"	"	"	"	"	"	"	5		"
	t_{WHSC}		70	"	"	"	"	"	"	"	"	"	"	"	"	5		"
10	Same tests, terminal conditions, and limits as subgroup 9, except T_C = 125°C.																	
11	Same tests, terminal conditions, and limits as subgroup 9, except T_C = -55°C.																	

See footnotes at end of table.

TABLE III. Group A inspection for device type 11 - Continued

Terminal conditions (pins not designated may be high ≥2.1 V or low ≤0.8 V, or open or GND)

Subgroup	Symbol	MIL-STD-883 method	Case W	12	13	14	15	16	17	18	19	20	21	22	Meas. terminal	Test limits		
			Case X and K	14	15	16	17	18	19	20	21	22	23	24				
			Case Y	13	14	15	16	17	19	20	21	22	23	24				
			Test No.	Q2	D3	Q3	D4	Q4	CS2	$\overline{OE}$	$\overline{CS}$ 1	$\overline{WE}$	A4	V_{CC}		Min	Max	Unit
1 T_C = 25°C	I_{OLZ}	3010	53	GND	GND	GND	GND	GND						4.5 V	Q1		.45	V
			54	8 mA	"	GND	"	GND						"	Q2		"	"
			55	GND	"	8 mA	"	GND						"	Q3		"	"
			56	GND	"	GND	"	8 mA						"	Q4		"	"
	I_{CC}	3005	57		GND		GND		GND	GND	GND	GND	GND	5.5 V	V_{CC}		1/	mA
2	Same tests, terminal conditions, and limits as subgroup 1, except T_C = 125ºC.																	
3	Same tests, terminal conditions, and limits as subgroup 1, except T_C = -55ºC, and I_{CC} (max) limit = 90 mA.																	
7 T_C = 25°C	Functional tests	3014	58	3/	3/	3/	3/	3/	3/	3/	3/	3/	3/	3/	Q			
8	Same tests, terminal conditions, and limits as subgroup 7, except T_C = 125°C and -55ºC.																	
9 T_C = 25°C	t_{AVQV}	Fig. 5	59	5/	4/	5/	4/	5/	4/	4/	4/	4/	4/	4/	Q		75	ns
	t_{SVQV}		60	"	"	"	"	"	"	"	"	"	"	"	"		45	"
	t_{SCQZ}		61	"	"	"	"	"	"	"	"	"	"	"	"		45	"
	t_{WLQV}		62	"	"	"	"	"	"	"	"	"	"	"	"		45	"
	t_{WHQV}		63	"	"	"	"	"	"	"	"	"	"	"	"		50	"
	t_{WLWH}		64	"	6/	"	6/	"	6/	6/	6/	6/	6/	6/	"	55		"
	t_{WHDC}		65	"	"	"	"	"	"	"	"	"	"	"	"	5		"
	t_{DCWL}		66	"	"	"	"	"	"	"	"	"	"	"	"	5		"
	t_{AVWL}		67	"	"	"	"	"	"	"	"	"	"	"	"	10		"
	t_{WHAC}		68	"	"	"	"	"	"	"	"	"	"	"	"	10		"
	t_{SVWL}		69	"	"	"	"	"	"	"	"	"	"	"	"	5		"
	t_{WHSC}		70	"	"	"	"	"	"	"	"	"	"	"	"	5		"
10	Same tests, terminal conditions, and limits as subgroup 9, except T_C = 125°C.																	
11	Same tests, terminal conditions, and limits as subgroup 9, except T_C = -55°C.																	

See footnotes at end of table.

TABLE III. Group A inspection for device type 12.

Terminal conditions (pins not designated may be high ≥2.1 V or low ≤0.8 V, or open or GND)

Subgroup	Symbol	MIL-STD-883 method	Case W	1	2	3	4	5	6	7	8	9	10	11	Meas. terminal	Test limits		
			Case X and K	1	2	3	4	5	6	7	8	9	10	11				
			Case Y	1	2	3	4	5	7	8	9	10	11	12				
			Test No.	A3	A2	A1	A0	A5	A6	A7	GND	D1	Q1	D2		Min	Max	Unit
1	V_{IC}		1	-10 mA							GND				A3		-1.5	V
T_C = 25°C			2		-10 mA						"				A2		"	"
			3			-10 mA					"				A1		"	"
			4				-10 mA				"				A0		"	"
			5					-10 mA			"				A5		"	"
			6						-10 mA		"				A6		"	"
			7							-10 mA	"				A7		"	"
			8								"	-10 mA			D1		"	"
			9								"			-10 mA	D2		"	"
			10								"				D3		"	"
			11								"				D4		"	"
			12								"				CS2		"	"
			13								"				$\overline{OE}$		"	"
			14								"				$\overline{CS}$ 1		"	"
			15								"				$\overline{WE}$		"	"
			16								"				A4		"	"
	I_{IL}	3009	17	0.45 V							"				A3	-10	-300	µA
			18		0.45 V						"				A2	"	"	"
			19			0.45 V					"				A1	"	"	"
			20				0.45 V				"				A0	"	"	"
			21					0.45 V			"				A5	"	"	"
			22						0.45 V		"				A6	"	"	"
			23							0.45 V	"				A7	"	"	"
			24								"	0.45 V			D1	"	"	"
			25								"			0.45 V	D2	"	"	"
			26								"				D3	"	"	"
			27								"				D4	"	"	"
			28								"				CS2	"	"	"
			29								"				$\overline{OE}$	"	"	"
			30								"				$\overline{CS}$ 1	"	"	"
			31								"				$\overline{WE}$	"	"	"
			32								"				A4	"	"	"
	I_{IH1}	3010	33	5.5 V							"				A3		40	"
			34		5.5 V						"				A2		"	"
			35			5.5 V					"				A1		"	"
			36				5.5 V				"				A0		"	"
			37					5.5 V			"				A5		"	"
			38						5.5 V		"				A6		"	"
			39							5.5 V	"				A7		"	"
			40								"	5.5 V			D1		"	"
			41								"			5.5 V	D2		"	"
			42								"				D3		"	"
			43								"				D4		"	"
			44								"				CS2		"	"
			45								"				$\overline{OE}$		"	"
			46								"				$\overline{CS}$ 1		"	"
			47								"				$\overline{WE}$		"	"
			48								"				A4		"	"
	I_{OHZ}		49								"	0.4 V	2.4 V		Q1	-50	50	"
			50								"			0.4 V	Q2	"	"	"
			51								"				Q3	"	"	"
			52								"				Q4	"	"	"

See footnotes at end of table.

TABLE III. Group A inspection for device type 12 – Continued.

Terminal conditions (pins not designated may be high ≥2.1 V or low ≤0.8 V, or open or GND)

Subgroup	Symbol	MIL-STD-883 method	Case W	12	13	14	15	16	17	18	19	20	21	22	Meas. terminal	Test limits		
			Case X and K	14	15	16	17	18	19	20	21	22	23	24				
			Case Y	13	14	15	16	17	19	20	21	22	23	24				
			Test No.	Q2	D3	Q3	D4	Q4	CS2	$\overline{OE}$	$\overline{CS\ 1}$	$\overline{WE}$	A4	V_{CC}		Min	Max	Unit
1 T_C = 25°C	V_{IC}		1											5.5 V	A3		-1.5	V
			2											"	A2		"	"
			3											"	A1		"	"
			4											"	A0		"	"
			5											"	A5		"	"
			6											"	A6		"	"
			7											"	A7		"	"
			8											"	D1		"	"
			9											"	D2		"	"
			10		-10 mA									"	D3		"	"
			11				-10 mA							"	D4		"	"
			12						-10 mA					"	CS2		"	"
			13							-10 mA				"	$\overline{OE}$		"	"
			14								-10 mA			"	$\overline{CS\ 1}$		"	"
			15									-10 mA		"	$\overline{WE}$		"	"
			16										-10 mA	"	A4		"	"
	I_{IL}	3009	17											"	A3	-10	-300	μA
			18											"	A2	"	"	"
			19											"	A1	"	"	"
			20											"	A0	"	"	"
			21											"	A5	"	"	"
			22											"	A6	"	"	"
			23											"	A7	"	"	"
			24											"	D1	"	"	"
			25											"	D2	"	"	"
			26		0.45 V									"	D3	"	"	"
			27				0.45 V							"	D4	"	"	"
			28						0.45 V					"	CS2	"	"	"
			29							0.45 V				"	$\overline{OE}$	"	"	"
			30								0.45 V			"	$\overline{CS\ 1}$	"	"	"
			31									0.45 V		"	$\overline{WE}$	"	"	"
			32										0.45 V	"	A4	"	"	"
	I_{IH1}	3010	33											"	A3		40	"
			34											"	A2		"	"
			35											"	A1		"	"
			36											"	A0		"	"
			37											"	A5		"	"
			38											"	A6		"	"
			39											"	A7		"	"
			40											"	D1		"	"
			41											"	D2		"	"
			42		5.5 V									"	D3		"	"
			43				5.5 V							"	D4		"	"
			44						5.5 V					"	CS2		"	"
			45							5.5 V				"	$\overline{OE}$		"	"
			46								5.5 V			"	$\overline{CS\ 1}$		"	"
			47									5.5 V		"	$\overline{WE}$		"	"
			48										5.5 V	"	A4		"	"
	I_{OHZ}		49						5.5 V	5.5 V	GND			"	Q1	-50	50	"
			50	2.4 V					"	"	"			"	Q2	"	"	"
			51		0.4 V	2.4 V			"	"	"			"	Q3	"	"	"
			52				0.4 V	2.4 V	"	"	"			"	Q4	"	"	"

See footnotes at end of table.

TABLE III. Group A inspection for device type 12 - Continued

Terminal conditions (pins not designated may be high ≥2.1 V or low ≤0.8 V, or open or GND)

Subgroup	Symbol	MIL-STD-883 method	Case W	1	2	3	4	5	6	7	8	9	10	11	Meas. terminal	Test limits		
			Case X and K	1	2	3	4	5	6	7	8	9	10	11				
			Case Y	1	2	3	4	5	7	8	9	10	11	12				
			Test No.	A3	A2	A1	A0	A5	A6	A7	GND	D1	Q1	D2		Min	Max	Unit
1 T_C = 25°C	I_{OLZ}		53								GND	0.4 V	0.45 V		Q1	-50	50	µA
			54								"			0.4 V	Q2	"	"	"
			55								"				Q3	"	"	"
			56								"				Q4	"	"	"
	V_{OL}	3007	57								"	0.8 V	8 mA		Q1		.45	V
			58								"			0.8 V	Q2		"	"
			59								"				Q3		"	"
			60								"				Q4		"	"
	V_{OH}	3006	61								"	2.1 V	-5.2 V		Q1	2.4		"
			62								"			2.1 V	Q2	"		"
			63								"				Q3	"		"
			64								"				Q4	"		"
	I_{OS}		65	GND	GND	GND	GND	GND	GND	GND	"	5.5 V	GND		Q1	-10	-70	mA
			66	"	"	"	"	"	"	"	"			5.5 V	Q2	"	"	"
			67	"	"	"	"	"	"	"	"				Q3	"	"	"
			68	"	"	"	"	"	"	"	"				Q4	"	"	"
	I_{CC}	3005	69	GND	GND	GND	GND	GND	GND	GND	GND	GND		GND	V_{CC}		1/	
2	Same tests, terminal conditions, and limits as for subgroup 1, except T_C = 125ºC.																	
3	Same tests, terminal conditions, and limits as for subgroup 1, except T_C = -55ºC and I_{CC} (max) limit = 90 mA.																	
7 T_C = 25°C	Functional tests	3014	70	3/	3/	3/	3/	3/	3/	3/	GND	3/	3/	3/	Q			
8	Same tests, terminal conditions, and limits as subgroup 7, except T_C = -55ºC and +125°C.																	
9 T_C = 25°C	t_{AVQV}	Fig. 5	71	4/	4/	4/	4/	4/	4/	4/	GND	4/	5/	4/	Q		75	ns
	t_{SVQV}		72	"	"	"	"	"	"	"	"	"	"	"	"		45	"
	t_{SCQZ}		73	"	"	"	"	"	"	"	"	"	"	"	"		45	"
	t_{WLQZ}		74	"	"	"	"	"	"	"	"	"	"	"	"		45	"
	t_{WHQV}		75	"	"	"	"	"	"	"	"	"	"	"	"		50	"
	t_{WLWH}		76	6/	6/	6/	6/	6/	6/	6/	"	6/	"	6/	"	55		"
	t_{WHDC}		77	"	"	"	"	"	"	"	"	"	"	"	"	5		"
	t_{DCWL}		78	"	"	"	"	"	"	"	"	"	"	"	"	5		"
	t_{AVWL}		79	"	"	"	"	"	"	"	"	"	"	"	"	10		"
	t_{WHAC}		80	"	"	"	"	"	"	"	"	"	"	"	"	10		"
	t_{SVWL}		81	"	"	"	"	"	"	"	"	"	"	"	"	5		"
	t_{WHSC}		82	"	"	"	"	"	"	"	"	"	"	"	"	5		"
10	Same tests, terminal conditions, and limits as subgroup 9, except T_C = 125°C.																	
11	Same tests, terminal conditions, and limits as subgroup 9, except T_C = -55°C.																	

See footnotes at end of table.

TABLE III. Group A inspection for device type 12 - Continued

Terminal conditions (pins not designated may be high ≥2.1 V or low ≤0.8 V, or open or GND)

Subgroup	Symbol	MIL-STD-883 method	Case W	12	13	14	15	16	17	18	19	20	21	22	Meas. terminal	Test limits		
			Case X and K	14	15	16	17	18	19	20	21	22	23	24				
			Case Y	13	14	15	16	17	19	20	21	22	23	24				
			Test No.	Q2	D3	Q3	D4	Q4	CS2	$\overline{OE}$	$\overline{CS}$ 1	$\overline{WE}$	A4	V_{CC}		Min	Max	Unit
1 T_C = 25°C	I_{OLZ}		53						5.5 V	5.5 V	GND			5.5 V	Q1	-50	50	µA
			54	.45 V					"	"	"			"	Q2	"	"	"
			55		0.4 V	.45 V			"	"	"			"	Q3	"	"	"
			56				0.4 V	.45 V	"	"	"			"	Q4	"	"	"
	V_{OL}	3007	57						"	GND	"	2/		4.5 V	Q1		.45	V
			58	8 mA					"	"	"	"		"	Q2		"	"
			59		0.8 V	8 mA			"	"	"	"		"	Q3		"	"
			60				0.8 V	8 mA	"	"	"	"		"	Q4		"	"
	V_{OH}	3006	61						"	"	"	"		"	Q1	2.4		"
			62	-5.2 mA					"	"	"	"		"	Q2	"		"
			63		2.1 V	-5.2 mA			"	"	"	"		"	Q3	"		"
			64				2.1 V	-5.2 mA	"	"	"	"		"	Q4	"		"
	I_{OS}		65						"	"	"	"	GND	5.5 V	Q1	-10	-70	mA
			66	GND					"	"	"	"	"	"	Q2	"	"	"
			67		5.5 V	GND			"	"	"	"	"	"	Q3	"	"	"
			68				5.5 V	GND	"	"	"	"	"	"	Q4	"	"	"
	I_{CC}	3005	69		GND		GND		GND	GND	GND	GND	GND		V_{CC}		1/	
2	Same tests, terminal conditions, and limits as subgroup 1, except T_C = 125ºC.																	
3	Same tests, terminal conditions, and limits as subgroup 1, except T_C = -55ºC, and I_{CC} (max) limit = 90 mA.																	
7 T_C = 25°C	Functional tests	3014	70	3/	3/	3/	3/	3/	3/	3/	3/	3/	3/	3/	Q			
8	Same tests, terminal conditions, and limits as subgroup 7, except T_C = -55ºC and I_{CC} (max) limit = 90 mA.																	
9 T_C = 25°C	t_{AVQV}	Fig. 5	71	5/	4/	5/	4/	5/	4/	4/	4/	4/	4/	4/	Q		75	ns
	t_{SVQV}		72	"	"	"	"	"	"	"	"	"	"	"	"		45	"
	t_{SCQZ}		73	"	"	"	"	"	"	"	"	"	"	"	"		45	"
	t_{WLQZ}		74	"	"	"	"	"	"	"	"	"	"	"	"		45	"
	t_{WHQV}		75	"	"	"	"	"	"	"	"	"	"	"	"		50	"
	t_{WLWH}		76	"	6/	"	6/	"	6/	6/	6/	6/	6/	6/	"	55		"
	t_{WHDC}		77	"	"	"	"	"	"	"	"	"	"	"	"	5		"
	t_{DCWL}		78	"	"	"	"	"	"	"	"	"	"	"	"	5		"
	t_{AVWL}		79	"	"	"	"	"	"	"	"	"	"	"	"	10		"
	t_{WHAC}		80	"	"	"	"	"	"	"	"	"	"	"	"	10		"
	t_{SVWL}		81	"	"	"	"	"	"	"	"	"	"	"	"	5		"
	t_{WHSC}		82	"	"	"	"	"	"	"	"	"	"	"	"	5		"
10	Same tests, terminal conditions, and limits as subgroup 9, except T_C = 125°C.																	
11	Same tests, terminal conditions, and limits as subgroup 9, except T_C = -55°C.																	

See footnotes at end of table.

TABLE III. Group A inspection for device type 13.

Terminal conditions (pins not designated may be high ≥2.1 V or low ≤0.8 V, or open or GND)

Subgroup	Symbol	MIL-STD-883 method	Case E, F Test No.	1 $\overline{CS}$	2 A0	3 A1	4 A2	5 A3	6 A4	7 Q	8 GND	9 A5	10 A6	11 A7	12 A8	13 A9	14 $\overline{WE}$	15 D_{IN}	16 V_{CC}	Meas. terminal	Test limits Min	Test limits Max	Test limits Unit
1 T_C = 25°C	V_{IC}		1	-10 mA							GND								5.5 V	$\overline{CS}$		-1.5	V
			2		-10 mA						"								"	A0		"	"
			3			-10 mA					"								"	A1		"	"
			4				-10 mA				"								"	A2		"	"
			5					-10 mA			"								"	A3		"	"
			6						-10 mA		"								"	A4		"	"
			7								"	-10 mA							"	A5		"	"
			8								"		-10 mA						"	A6		"	"
			9								"			-10 mA					"	A7		"	"
			10								"				-10 mA				"	A8		"	"
			11								"					-10 mA			"	A9		"	"
			12								"						-10 mA		"	$\overline{WE}$		"	"
			13								"							-10 mA	"	D_{IN}		"	"
	I_{IL}	3009	14	0.45 V							"								"	$\overline{CS}$	-1.0	-400	µA
			15		0.45 V						"								"	A0	"	"	"
			16			0.45 V					"								"	A1	"	"	"
			17				0.45 V				"								"	A2	"	"	"
			18					0.45 V			"								"	A3	"	"	"
			19						0.45 V		"								"	A4	"	"	"
			20								"	0.45 V							"	A5	"	"	"
			21								"		0.45 V						"	A6	"	"	"
			22								"			0.45 V					"	A7	"	"	"
			23								"				0.45 V				"	A8	"	"	"
			24								"					0.45 V			"	A9	"	"	"
			25								"						0.45 V		"	$\overline{WE}$	"	"	"
			26								"							0.45 V	"	D_{IN}	"	"	"
	I_{IH1}	3010	27	5.5 V							"								"	$\overline{CS}$		40	"
			28		5.5 V						"								"	A0		"	"
			29			5.5 V					"								"	A1		"	"
			30				5.5 V				"								"	A2		"	"
			31					5.5 V			"								"	A3		"	"
			32						5.5 V		"								"	A4		"	"
			33								"	5.5 V							"	A5		"	"
			34								"		5.5 V						"	A6		"	"
			35								"			5.5 V					"	A7		"	"
			36								"				5.5 V				"	A8		"	"
			37								"					5.5 V			"	A9		"	"
			38								"						5.5 V		"	$\overline{WE}$		"	"
			39								"							5.5 V	"	D_{IN}		"	"
	I_{OS}	3011	40	GND	GND	GND	GND	GND	GND	GND	"	GND	GND	GND	GND	GND	2/	5.5 V	"	Q	-20	-100	mA
	I_{CC}	3005	41	GND	GND	GND	GND	GND	GND		"	GND	GND	GND	GND	GND	GND	GND	"	V_{CC}		1/	mA
	I_{OHZ}		42	0.4 V	0.4 V	0.4 V	0.4 V	0.4 V	0.4 V	2.4 V	"	0.4 V	0.4 V	0.4 V	0.4 V	0.4 V	0.4 V	0.4 V	"	Q		50	µA
	I_{OLZ}		43	0.4 V	0.4 V	0.4 V	0.4 V	0.4 V	0.4 V	0.45 V	"	0.4 V	0.4 V	0.4 V	0.4 V	0.4 V	0.4 V	0.4 V	"	Q		-50	µA
	V_{OL}	3007	44	0.8 V	0.8 V	0.8 V	0.8 V	0.8 V	0.8 V	16 mA	"	0.8 V	0.8 V	0.8 V	0.8 V	0.8 V	2/	0.4 V	4.5 V	Q		0.45	V
	V_{OH}	3006	45	0.8 V	0.8 V	0.8 V	0.8 V	0.8 V	0.8 V	-5.2 mA	"	0.8 V	0.8 V	0.8 V	0.8 V	0.8 V	2/	2.1 V	4.5 V	Q	2.4		V
2	Same tests, terminal conditions, and limits as for subgroup 1, except T_C = 125ºC and V_{IC} tests are omitted.																						
3	Same tests, terminal conditions, and limits as for subgroup 1, except T_C = -55ºC and V_{IC} tests are omitted.																						

See footnotes at end of table.

TABLE III. Group A inspection for device types 13 – Continued.

Terminal conditions (pins not designated may be high ≥2.1 V or low ≤0.8 V, or open or GND)

Subgroup	Symbol	MIL-STD-883 method	Case E, F Test No.	1 $\overline{CS}$	2 A0	3 A1	4 A2	5 A3	6 A4	7 Q	8 GND	9 A5	10 A6	11 A7	12 A8	13 A9	14 $\overline{WE}$	15 D_{IN}	16 V_{CC}	Meas. terminal	Test limits Min	Max	Unit
7 T_C = 25°C	Functional tests	3014	46	3/	3/	3/	3/	3/	3/	3/	GND	3/	3/	3/	3/	3/	3/	3/	3/	Q		3/	
8	Same tests, terminal conditions, and limits as subgroup 7, except T_C = 125ºC and -55ºC.																						
9 T_C = 25°C	t_{AVQV}	GALPAT Fig. 5	47	4/	4/	4/	4/	4/	4/	5/	GND	4/	4/	4/	4/	4/	4/	4/	4/	Q		50	ns
	t_{SVQV}	"	48	"	"	"	"	"	"	"	"	"	"	"	"	"	"	"	"	"		35	"
	t_{SCQZ}	"	49	"	"	"	"	"	"	"	"	"	"	"	"	"	"	"	"	"		35	"
	t_{WLQZ}	"	50	"	"	"	"	"	"	"	"	"	"	"	"	"	"	"	"	"		45	"
	t_{WHQV}	"	51	"	"	"	"	"	"	"	"	"	"	"	"	"	"	"	"	"		40	"
	t_{WLWH}	GGII Fig. 5	52	6/	6/	6/	6/	6/	6/	"	"	6/	6/	6/	6/	6/	6/	6/	6/	"	35		"
	t_{WHDC}	"	53	"	"	"	"	"	"	"	"	"	"	"	"	"	"	"	"	"	5		"
	t_{DCWL}	"	54	"	"	"	"	"	"	"	"	"	"	"	"	"	"	"	"	"	10		"
	t_{AVWL}	"	55	"	"	"	"	"	"	"	"	"	"	"	"	"	"	"	"	"	10		"
	t_{WHAC}	"	56	"	"	"	"	"	"	"	"	"	"	"	"	"	"	"	"	"	5		"
	t_{SVWL}	"	57	"	"	"	"	"	"	"	"	"	"	"	"	"	"	"	"	"	10		"
	t_{WHSC}	"	58	"	"	"	"	"	"	"	"	"	"	"	"	"	"	"	"	"	5		"
10	Same tests, terminal conditions, and limits as for subgroup 9, except T_C = 125°C.																						
11	Same tests, terminal conditions, and limits as for subgroup 9, except T_C = -55°C.																						

See footnotes at end of table.

TABLE III. Group A inspection for device type 14.

Terminal conditions (pins not designated may be high ≥2.1 V or low ≤0.8 V, or open or GND)

Subgroup	Symbol	MIL-STD-883 method	Case W	1	2	3	4	5	6	7	8	9	10	11	Meas. terminal	Test limits		
			Case X and K	1	2	3	4	5	6	7	8	9	10	11				
			Case Y	1	2	3	4	5	7	8	9	10	11	12				
			Test No.	A3	A2	A1	A0	A5	A6	A7	GND	D1	Q1	D2		Min	Max	Unit
1 $T_C = 25°C$	V_{IC}		1	-10 mA							GND				A3		-1.5	V
			2		-10 mA						"				A2		"	"
			3			-10 mA					"				A1		"	"
			4				-10 mA				"				A0		"	"
			5					-10 mA			"				A5		"	"
			6						-10 mA		"				A6		"	"
			7							-10 mA	"				A7		"	"
			8								"	-10 mA			D1		"	"
			9								"			-10 mA	D2		"	"
			10								"				D3		"	"
			11								"				D4		"	"
			12								"				CS2		"	"
			13								"				$\overline{OE}$		"	"
			14								"				$\overline{CS\ 1}$		"	"
			15								"				$\overline{WE}$		"	"
			16								"				A4		"	"
	I_{IL}	3009	17	0.45 V							"				A3	-10	-300	μA
			18		0.45 V						"				A2	"	"	"
			19			0.45 V					"				A1	"	"	"
			20				0.45 V				"				A0	"	"	"
			21					0.45 V			"				A5	"	"	"
			22						0.45 V		"				A6	"	"	"
			23							0.45 V	"				A7	"	"	"
			24								"	0.45 V			D1	"	"	"
			25								"			0.45 V	D2	"	"	"
			26								"				D3	"	"	"
			27								"				D4	"	"	"
			28								"				CS2	"	"	"
			29								"				$\overline{OE}$	"	"	"
			30								"				$\overline{CS\ 1}$	"	"	"
			31								"				$\overline{WE}$	"	"	"
			32								"				A4	"	"	"
	I_{IH1}	3010	33	5.5 V							"				A3		40	"
			34		5.5 V						"				A2		"	"
			35			5.5 V					"				A1		"	"
			36				5.5 V				"				A0		"	"
			37					5.5 V			"				A5		"	"
			38						5.5 V		"				A6		"	"
			39							5.5 V	"				A7		"	"
			40								"	5.5 V			D1		"	"
			41								"			5.5 V	D2		"	"
			42								"				D3		"	"
			43								"				D4		"	"
			44								"				CS2		"	"
			45								"				$\overline{OE}$		"	"
			46								"				$\overline{CS\ 1}$		"	"
			47								"				$\overline{WE}$		"	"
			48								"				A4		"	"
	I_{OHZ}		49								"	0.4 V	2.4 V		Q1	-50	50	"
			50								"			0.4 V	Q2	"	"	"
			51								"				Q3	"	"	"
			52								"				Q4	"	"	"

See footnotes at end of table.

TABLE III. Group A inspection for device type 14- Continued

Terminal conditions (pins not designated may be high ≥2.1 V or low ≤0.8 V, or open or GND)

Subgroup	Symbol	MIL-STD-883 method	Case W	12	13	14	15	16	17	18	19	20	21	22	Meas. terminal	Test limits		
			Case X and K	14	15	16	17	18	19	20	21	22	23	24				
			Case Y	13	14	15	16	17	19	20	21	22	23	24				
			Test No.	Q2	D3	Q3	D4	Q4	CS2	$\overline{OE}$	$\overline{CS}$ 1	$\overline{WE}$	A4	V_{CC}		Min	Max	Unit
1 T_C = 25°C	V_{IC}		1											5.5 V	A3		-1.5	V
			2											"	A2		"	"
			3											"	A1		"	"
			4											"	A0		"	"
			5											"	A5		"	"
			6											"	A6		"	"
			7											"	A7		"	"
			8											"	D1		"	"
			9											"	D2		"	"
			10		-10 mA									"	D3		"	"
			11				-10 mA							"	D4		"	"
			12						-10 mA					"	CS2		"	"
			13							-10 mA				"	$\overline{OE}$		"	"
			14								-10 mA			"	$\overline{CS}$ 1		"	"
			15									-10 mA		"	$\overline{WE}$		"	"
			16										-10 mA	"	A4		"	"
	I_{IL}	3009	17											"	A3	-10	-300	µA
			18											"	A2	"	"	"
			19											"	A1	"	"	"
			20											"	A0	"	"	"
			21											"	A5	"	"	"
			22											"	A6	"	"	"
			23											"	A7	"	"	"
			24											"	D1	"	"	"
			25											"	D2	"	"	"
			26		0.45 V									"	D3	"	"	"
			27				0.45 V							"	D4	"	"	"
			28						0.45 V					"	CS2	"	"	"
			29							0.45 V				"	$\overline{OE}$	"	"	"
			30								0.45 V			"	$\overline{CS}$ 1	"	"	"
			31									0.45 V		"	$\overline{WE}$	"	"	"
			32										0.45 V	"	A4	"	"	"
	I_{IH1}	3010	33											"	A3		40	"
			34											"	A2		"	"
			35											"	A1		"	"
			36											"	A0		"	"
			37											"	A5		"	"
			38											"	A6		"	"
			39											"	A7		"	"
			40											"	D1		"	"
			41											"	D2		"	"
			42		5.5 V									"	D3		"	"
			43				5.5 V							"	D4		"	"
			44						5.5 V					"	CS2		"	"
			45							5.5 V				"	$\overline{OE}$		"	"
			46								5.5 V			"	$\overline{CS}$ 1		"	"
			47									5.5 V		"	$\overline{WE}$		"	"
			48										5.5 V	"	A4		"	"
	I_{OHZ}		49						5.5 V	5.5 V	GND			"	Q1	-50	50	"
			50	2.4 V					"	"	"			"	Q2	"	"	"
			51		0.4 V	2.4 V			"	"	"			"	Q3	"	"	"
			52				0.4 V	2.4 V	"	"	"			"	Q4	"	"	"

See footnotes at end of table.

TABLE III. Group A inspection for device type 14 - Continued

Terminal conditions (pins not designated may be high ≥2.1 V or low ≤0.8 V, or open or GND)

Subgroup	Symbol	MIL-STD-883 method	Case W	1	2	3	4	5	6	7	8	9	10	11	Meas. terminal	Test limits		
			Case X and K	1	2	3	4	5	6	7	8	9	10	11				
			Case Y	1	2	3	4	5	7	8	9	10	11	12				
			Test No.	A3	A2	A1	A0	A5	A6	A7	GND	D1	Q1	D2		Min	Max	Unit
1 T_C = 25°C	I_{OLZ}	3010	53								GND	0.4 V	0.45 V		Q1	-50	50	µA
			54								"			0.4 V	Q2	"	"	"
			55								"				Q3	"	"	"
			56								"				Q4	"	"	"
	V_{OL}	3007	57								"	0.8 V	8 mA	GND	Q1		.45	V
			58								"	GND	GND	0.8 V	Q2		"	"
			59								"	GND	GND	GND	Q3		"	"
			60								"	GND	GND	GND	Q4		"	"
	V_{OH}	3006	61								"	2.1 V	-5.2 V		Q1	2.4		"
			62								"			2.1 V	Q2	"		"
			63								"				Q3	"		"
			64								"				Q4	"		"
	I_{OS}		65	GND	GND	GND	GND	GND	GND	GND	"	5.5 V	GND		Q1	-10	-70	mA
			66	"	"	"	"	"	"	"	"			5.5 V	Q2	"	"	"
			67	"	"	"	"	"	"	"	"				Q3	"	"	"
			68	"	"	"	"	"	"	"	"				Q4	"	"	"
	I_{CC}	3005	69	GND	GND	GND	GND	GND	GND	GND	GND	GND		GND	V_{CC}		1/	
2	Same tests, terminal conditions, and limits as subgroup 1, except T_C = 125ºC.																	
3	Same tests, terminal conditions, and limits as subgroup 1, except T_C = -55ºC.																	
7 T_C = 25°C	Functional tests	3014	70	3/	3/	3/	3/	3/	3/	3/	GND	3/	3/	3/	Q			
8	Same tests, terminal conditions, and limits as subgroup 7, except T_C = 125ºC and -55ºC.																	
9 T_C = 25°C	t_{AVQV}	Fig. 5	71	4/	4/	4/	4/	4/	4/	4/	GND	4/	5/	4/	Q		45	ns
	t_{SVQV}		72	"	"	"	"	"	"	"	"	"	"	"	"		35	"
	t_{SCQZ}		73	"	"	"	"	"	"	"	"	"	"	"	"		35	"
	t_{WLQZ}		74	"	"	"	"	"	"	"	"	"	"	"	"		45	"
	t_{WHQV}		75	"	"	"	"	"	"	"	"	"	"	"	"		40	"
	t_{ELQV}		76	"	"	"	"	"	"	"	"	"	"	"	"		35	"
	t_{EHQZ}		77	"	"	"	"	"	"	"	"	"	"	"	"		35	"
	t_{WLWH}		78	6/	6/	6/	6/	6/	6/	6/	"	6/	"	6/	"	35		"
	t_{WHDC}		79	"	"	"	"	"	"	"	"	"	"	"	"	5		"
	t_{DCWL}		80	"	"	"	"	"	"	"	"	"	"	"	"	5		"
	t_{AVWL}		81	"	"	"	"	"	"	"	"	"	"	"	"	5		"
	t_{WHAC}		82	"	"	"	"	"	"	"	"	"	"	"	"	5		"
	t_{SVWL}		83	"	"	"	"	"	"	"	"	"	"	"	"	5		"
	t_{WHSC}		84	"	"	"	"	"	"	"	"	"	"	"	"	5		"
10	Same tests, terminal conditions, and limits as subgroup 9, except T_C = 125°C.																	
11	Same tests, terminal conditions, and limits as subgroup 9, except T_C = -55°C.																	

See footnotes at end of table.

TABLE III. Group A inspection for device type 14 - Continued

Terminal conditions (pins not designated may be high ≥2.1 V or low ≤0.8 V, or open or GND)

Subgroup	Symbol	MIL-STD-883 method	Case W	12	13	14	15	16	17	18	19	20	21	22	Meas. terminal	Test limits		
			Case X and K	14	15	16	17	18	19	20	21	22	23	24				
			Case Y	13	14	15	16	17	19	20	21	22	23	24				
			Test No.	Q2	D3	Q3	D4	Q4	CS2	$\overline{OE}$	$\overline{CS}$ 1	$\overline{WE}$	A4	V_{CC}		Min	Max	Unit
1 T_C = 25°C	I_{OLZ}	3010	53						5.5 V	5.5 V	GND			5.5 V	Q1	-50	50	µA
			54	.45 V					"	"	"			"	Q2	"	"	"
			55		0.4 V	.45 V			"	"	"			"	Q3	"	"	"
			56				0.4 V	.45 V	"	"	"			"	Q4	"	"	"
	V_{OL}	3007	57	GND	GND	GND	GND	GND	"	GND	"	2/		4.5 V	Q1		.45	V
			58	8 mA	GND	GND	GND	GND	"	"	"	"		"	Q2		"	"
			59	GND	0.8 V	8 mA	GND	GND	"	"	"	"		"	Q3		"	"
			60	GND	GND	GND	0.8 V	8 mA	"	"	"	"		"	Q4		"	"
	V_{OH}	3006	61						"	"	"	"		"	Q1	2.4		"
			62	-5.2 mA					"	"	"	"		"	Q2	"		"
			63		2.1 V	-5.2 mA			"	"	"	"		"	Q3	"		"
			64				2.1 V	-5.2 mA	"	"	"	"		"	Q4	"		"
	I_{OS}		65						"	"	"		GND	5.5 V	Q1	-10	-70	mA
			66	GND					"	"	"		"	"	Q2	"	"	"
			67		5.5 V	GND			"	"	"		"	"	Q3	"	"	"
			68				5.5 V	GND	"	"	"		"	"	Q4	"	"	"
	I_{CC}	3005	69		GND		GND		GND	GND	GND	GND	GND		V_{CC}		1/	
2	Same tests, terminal conditions, and limits as subgroup 1, except T_C = 125ºC.																	
3	Same tests, terminal conditions, and limits as subgroup 1, except T_C = -55ºC.																	
7 T_C = 25°C	Functional tests	3014	70	3/	3/	3/	3/	3/	3/	3/	3/	3/	3/	3/	Q			
8	Same tests, terminal conditions, and limits as subgroup 7, except T_C = 125ºC and -55ºC.																	
9 T_C = 25°C	t_{AVQV}	Fig. 5	71	5/	4/	5/	4/	5/	4/	4/	4/	4/	4/	4/	Q		45	ns
	t_{SVQV}		72	"	"	"	"	"	"	"	"	"	"	"	"		35	"
	t_{SCQZ}		73	"	"	"	"	"	"	"	"	"	"	"	"		35	"
	t_{WLQZ}		74	"	"	"	"	"	"	"	"	"	"	"	"		45	"
	t_{WHQV}		75	"	"	"	"	"	"	"	"	"	"	"	"		40	"
	t_{ELQV}		76	"	"	"	"	"	"	"	"	"	"	"	"		35	"
	t_{EHQZ}		77	"	"	"	"	"	"	"	"	"	"	"	"		35	"
	t_{WLWH}		78	"	6/	"	6/	"	6/	6/	6/	6/	6/	6/	"	35		"
	t_{WHDC}		79	"	"	"	"	"	"	"	"	"	"	"	"	5		"
	t_{DCWL}		80	"	"	"	"	"	"	"	"	"	"	"	"	5		"
	t_{AVWL}		81	"	"	"	"	"	"	"	"	"	"	"	"	5		"
	t_{WHAC}		82	"	"	"	"	"	"	"	"	"	"	"	"	5		"
	t_{SVWL}		83	"	"	"	"	"	"	"	"	"	"	"	"	5		"
	t_{WHSC}		84	"	"	"	"	"	"	"	"	"	"	"	"	5		"
10	Same tests, terminal conditions, and limits as subgroup 9, except T_C = 125°C.																	
11	Same tests, terminal conditions, and limits as subgroup 9, except T_C = -55°C.																	

See footnotes at end of table.

TABLE III. Group A inspection for device type 15.

Terminal conditions (pins not designated may be high ≥2.1 V or low ≤0.8 V, or open or GND)

Subgroup	Symbol	MIL-STD-883 method	Case W	1	2	3	4	5	6	7	8	9	10	11	Meas. terminal	Test limits		
			Case X and K	1	2	3	4	5	6	7	8	9	10	11				
			Case Y	1	2	3	4	5	7	8	9	10	11	12				
			Test No.	A3	A2	A1	A0	A5	A6	A7	GND	D1	Q1	D2		Min	Max	Unit
1	V_{IC}		1	-10 mA							GND				A3		-1.5	V
T_C = 25°C			2		-10 mA						"				A2		"	"
			3			-10 mA					"				A1		"	"
			4				-10 mA				"				A0		"	"
			5					-10 mA			"				A5		"	"
			6						-10 mA		"				A6		"	"
			7							-10 mA	"				A7		"	"
			8								"	-10 mA			D1		"	"
			9								"			-10 mA	D2		"	"
			10								"				D3		"	"
			11								"				D4		"	"
			12								"				CS2		"	"
			13								"				$\overline{OE}$		"	"
			14								"				$\overline{CS\ 1}$		"	"
			15								"				$\overline{WE}$		"	"
			16								"				A4		"	"
	I_{IL}	3009	17	0.45 V							"				A3	-10	-300	µA
			18		0.45 V						"				A2	"	"	"
			19			0.45 V					"				A1	"	"	"
			20				0.45 V				"				A0	"	"	"
			21					0.45 V			"				A5	"	"	"
			22						0.45 V		"				A6	"	"	"
			23							0.45 V	"				A7	"	"	"
			24								"	0.45 V			D1	"	"	"
			25								"			0.45 V	D2	"	"	"
			26								"				D3	"	"	"
			27								"				D4	"	"	"
			28								"				CS2	"	"	"
			29								"				$\overline{OE}$	"	"	"
			30								"				$\overline{CS\ 1}$	"	"	"
			31								"				$\overline{WE}$	"	"	"
			32								"				A4	"	"	"
	I_{IH1}	3010	33	5.5 V							"				A3		40	"
			34		5.5 V						"				A2		"	"
			35			5.5 V					"				A1		"	"
			36				5.5 V				"				A0		"	"
			37					5.5 V			"				A5		"	"
			38						5.5 V		"				A6		"	"
			39							5.5 V	"				A7		"	"
			40								"	5.5 V			D1		"	"
			41								"			5.5 V	D2		"	"
			42								"				D3		"	"
			43								"				D4		"	"
			44								"				CS2		"	"
			45								"				$\overline{OE}$		"	"
			46								"				$\overline{CS\ 1}$		"	"
			47								"				$\overline{WE}$		"	"
			48								"				A4		"	"
	I_{OHZ}		49								"	0.4 V	2.4 V		Q1	-50	50	"
			50								"			0.4 V	Q2	"	"	"
			51								"				Q3	"	"	"
			52								"				Q4	"	"	"

See footnotes at end of table.

TABLE III. Group A inspection for device type 15.

Terminal conditions (pins not designated may be high ≥2.1 V or low ≤0.8 V, or open or GND)

Subgroup	Symbol	MIL-STD-883 method	Case W	12	13	14	15	16	17	18	19	20	21	22	Meas. terminal	Test limits		
			Case X and K	14	15	16	17	18	19	20	21	22	23	24				
			Case Y	13	14	15	16	17	19	20	21	22	23	24				
			Test No.	Q2	D3	Q3	D4	Q4	CS2	$\overline{OE}$	$\overline{CS}$ 1	$\overline{WE}$	A4	V_{CC}		Min	Max	Unit
1 T_C = 25°C	V_{IC}		1											5.5 V	A3		-1.5	V
			2											"	A2		"	"
			3											"	A1		"	"
			4											"	A0		"	"
			5											"	A5		"	"
			6											"	A6		"	"
			7											"	A7		"	"
			8											"	D1		"	"
			9											"	D2		"	"
			10		-10 mA									"	D3		"	"
			11				-10 mA							"	D4		"	"
			12						-10 mA					"	CS2		"	"
			13							-10 mA				"	$\overline{OE}$		"	"
			14								-10 mA			"	$\overline{CS}$ 1		"	"
			15									-10 mA		"	$\overline{WE}$		"	"
			16										-10 mA	"	A4		"	"
	I_{IL}	3009	17											"	A3	-10	-300	µA
			18											"	A2	"	"	"
			19											"	A1	"	"	"
			20											"	A0	"	"	"
			21											"	A5	"	"	"
			22											"	A6	"	"	"
			23											"	A7	"	"	"
			24											"	D1	"	"	"
			25											"	D2	"	"	"
			26		0.45 V									"	D3	"	"	"
			27				0.45 V							"	D4	"	"	"
			28						0.45 V					"	CS2	"	"	"
			29							0.45 V				"	$\overline{OE}$	"	"	"
			30								0.45 V			"	$\overline{CS}$ 1	"	"	"
			31									0.45 V		"	$\overline{WE}$	"	"	"
			32										0.45 V	"	A4	"	"	"
	I_{IH1}	3010	33											"	A3		40	"
			34											"	A2		"	"
			35											"	A1		"	"
			36											"	A0		"	"
			37											"	A5		"	"
			38											"	A6		"	"
			39											"	A7		"	"
			40											"	D1		"	"
			41											"	D2		"	"
			42		5.5 V									"	D3		"	"
			43				5.5 V							"	D4		"	"
			44						5.5 V					"	CS2		"	"
			45							5.5 V				"	$\overline{OE}$		"	"
			46								5.5 V			"	$\overline{CS}$ 1		"	"
			47									5.5 V		"	$\overline{WE}$		"	"
			48										5.5 V	"	A4		"	"
	I_{OHZ}		49						5.5 V	5.5 V	GND			"	Q1	-50	50	"
			50	2.4 V					"	"	"			"	Q2	"	"	"
			51		0.4 V	2.4 V			"	"	"			"	Q3	"	"	"
			52				0.4 V	2.4 V	"	"	"			"	Q4	"	"	"

See footnotes at end of table.

TABLE III. Group A inspection for device type 15 - Continued

Terminal conditions (pins not designated may be high ≥2.1 V or low ≤0.8 V, or open or GND)

Subgroup	Symbol	MIL-STD-883 method	Case W	1	2	3	4	5	6	7	8	9	10	11	Meas. terminal	Test limits		
			Case X and K	1	2	3	4	5	6	7	8	9	10	11				
			Case Y	1	2	3	4	5	7	8	9	10	11	12				
			Test No.	A3	A2	A1	A0	A5	A6	A7	GND	D1	Q1	D2		Min	Max	Unit
1 T_C = 25°C	I_{OLZ}		53								GND	0.4 V	0.45 V		Q1	-50	50	µA
			54								"			0.4 V	Q2	"	"	"
			55								"				Q3	"	"	"
			56								"				Q4	"	"	"
	V_{OL}	3007	57								"	0.8 V	8 mA		Q1		.45	V
			58								"			0.8 V	Q2		"	"
			59								"				Q3		"	"
			60								"				Q4		"	"
	V_{OH}	3006	61								"	2.1 V	-5.2 V		Q1	2.4		"
			62								"			2.1 V	Q2	"		"
			63								"				Q3	"		"
			64								"				Q4	"		"
	I_{OS}		65	GND	GND	GND	GND	GND	GND	GND	"	5.5 V	GND		Q1	-10	-70	mA
			66	"	"	"	"	"	"	"	"			5.5 V	Q2	"	"	"
			67	"	"	"	"	"	"	"	"				Q3	"	"	"
			68	"	"	"	"	"	"	"	"				Q4	"	"	"
	I_{CC}	3005	69	GND	GND	GND	GND	GND	GND	GND	GND	GND		GND	V_{CC}		1/	
2	Same tests, terminal conditions, and limits as subgroup 1, except T_C = 125ºC.																	
3	Same tests, terminal conditions, and limits as subgroup 1, except T_C = -55ºC and I_{CC} (max) limit = 90 mA.																	
7 T_C = 25°C	Functional tests	3014	70	3/	3/	3/	3/	3/	3/	3/	GND	3/	3/	3/	Q			
8	Same tests, terminal conditions, and limits as subgroup 7, except T_C = -55ºC and I_{CC} (max) limit = 90 mA.																	
9 T_C = 25°C	t_{AVQV}	Fig. 5	71	4/	4/	4/	4/	4/	4/	4/	GND	4/	5/	4/	Q		55	ns
	t_{SVQV}		72	"	"	"	"	"	"	"	"	"	"	"	"		40	"
	t_{SCQZ}		73	"	"	"	"	"	"	"	"	"	"	"	"		40	"
	t_{WLQZ}		74	"	"	"	"	"	"	"	"	"	"	"	"		45	"
	t_{WHQV}		75	"	"	"	"	"	"	"	"	"	"	"	"		45	"
	t_{ELQV}		76	"	"	"	"	"	"	"	"	"	"	"	"		40	"
	t_{EHQZ}		77	"	"	"	"	"	"	"	"	"	"	"	"		40	"
	t_{WLWH}		78	6/	6/	6/	6/	6/	6/	6/	"	6/	"	6/	"	40		"
	t_{WHDC}		79	"	"	"	"	"	"	"	"	"	"	"	"	5		"
	t_{DCWL}		80	"	"	"	"	"	"	"	"	"	"	"	"	5		"
	t_{AVWL}		81	"	"	"	"	"	"	"	"	"	"	"	"	10		"
	t_{WHAC}		82	"	"	"	"	"	"	"	"	"	"	"	"	5		"
	t_{SVWL}		83	"	"	"	"	"	"	"	"	"	"	"	"	5		"
	t_{WHSC}		84	"	"	"	"	"	"	"	"	"	"	"	"	5		"
10	Same tests, terminal conditions, and limits as subgroup 9, except T_C = 125°C.																	
11	Same tests, terminal conditions, and limits as subgroup 9, except T_C = -55°C.																	

See footnotes at end of table.

TABLE III. Group A inspection for device type 15 - Continued

Terminal conditions (pins not designated may be high ≥2.1 V or low ≤0.8 V, or open or GND)

Subgroup	Symbol	MIL-STD-883 method	Case W	12	13	14	15	16	17	18	19	20	21	22	Meas. terminal	Test limits		
			Case X and K	14	15	16	17	18	19	20	21	22	23	24				
			Case Y	13	14	15	16	17	19	20	21	22	23	24				
			Test No.	Q2	D3	Q3	D4	Q4	CS2	$\overline{OE}$	$\overline{CS}$ 1	$\overline{WE}$	A4	V_{CC}		Min	Max	Unit
1 T_C = 25°C	I_{OLZ}	3010	53						5.5 V	5.5 V	GND			5.5 V	Q1	-50	50	µA
			54	.45 V					"	"	"			"	Q2	"	"	"
			55		0.4 V	.45 V			"	"	"			"	Q3	"	"	"
			56				0.4 V	.45 V	"	"	"			"	Q4	"	"	"
	V_{OL}	3007	57						"	GND	"	2/		4.5 V	Q1		.45	V
			58	8 mA					"	"	"	"		"	Q2		"	"
			59		0.8 V	8 mA			"	"	"	"		"	Q3		"	"
			60				0.8 V	8 mA	"	"	"	"		"	Q4		"	"
	V_{OH}	3006	61						"	"	"	"		"	Q1	2.4		"
			62	-5.2 mA					"	"	"	"		"	Q2	"		"
			63		2.1 V	-5.2 mA			"	"	"	"		"	Q3	"		"
			64				2.1 V	-5.2 mA	"	"	"	"		"	Q4	"		"
	I_{OS}		65						"	"	"	"	GND	5.5 V	Q1	-10	-70	mA
			66	GND					"	"	"	"	"	"	Q2	"	"	"
			67		5.5 V	GND			"	"	"	"	"	"	Q3	"	"	"
			68				5.5 V	GND	"	"	"	"	"	"	Q4	"	"	"
	I_{CC}	3005	69		GND		GND		GND	GND	GND	GND	GND	"	V_{CC}		1/	
2	Same tests, terminal conditions, and limits as for subgroup 1, except T_C = 125ºC.																	
3	Same tests, terminal conditions, and limits as for subgroup 1, except T_C = -55ºC, and I_{CC} (max) limit = 90 mA.																	
7 T_C = 25°C	Functional tests	3014	70	3/	3/	3/	3/	3/	3/	3/	3/	3/	3/	3/	Q			
8	Same tests, terminal conditions, and limits as subgroup 7, except T_C = -55ºC and I_{CC} (max) limit = 90 mA.																	
9 T_C = 25°C	t_{AVQV}	Fig. 5	71	5/	4/	5/	4/	5/	4/	4/	4/	4/	4/	4/	Q		55	ns
	t_{SVQV}		72	"	"	"	"	"	"	"	"	"	"	"	"		40	"
	t_{SCQZ}		73	"	"	"	"	"	"	"	"	"	"	"	"		40	"
	t_{WLQZ}		74	"	"	"	"	"	"	"	"	"	"	"	"		45	"
	t_{WHQV}		75	"	"	"	"	"	"	"	"	"	"	"	"		45	"
	t_{ELQV}		76	"	"	"	"	"	"	"	"	"	"	"	"		40	"
	t_{EHQZ}		77	"	"	"	"	"	"	"	"	"	"	"	"		40	"
	t_{WLWH}		78	"	6/	"	6/	"	6/	6/	6/	6/	6/	6/	"	40		"
	t_{WHDC}		79	"	"	"	"	"	"	"	"	"	"	"	"	5		"
	t_{DCWL}		80	"	"	"	"	"	"	"	"	"	"	"	"	5		"
	t_{AVWL}		81	"	"	"	"	"	"	"	"	"	"	"	"	10		"
	t_{WHAC}		82	"	"	"	"	"	"	"	"	"	"	"	"	5		"
	t_{SVWL}		83	"	"	"	"	"	"	"	"	"	"	"	"	5		"
	t_{WHSC}		84	"	"	"	"	"	"	"	"	"	"	"	"	5		"
10	Same tests, terminal conditions, and limits as subgroup 9, except T_C = 125°C.																	
11	Same tests, terminal conditions, and limits as subgroup 9, except T_C = -55°C.																	

See footnotes at end of table.

NOTES:

1/ The I_{CC} are as follows:

Device type	25°C	125°C	-55°C
01, 02, 05, 06, 07, 08, 09, 10, 14	155 mA	130 mA	170 mA
03, 04, 13	65 mA	55 mA	75 mA
11, 12, 15	80 mA	70 mA	90 mA

2/ Toggle from ≥ 3.0 V to 0.4 V and return.

3/ The functional tests shall verify the truth table of figure 3. All bits shall be tested. Terminal conditions shall be as follows:

a. Inputs: H = 2.4 V, L = 0.4 V.
b. Outputs: Output voltage shall be H ≥ 1.5 V and L < 1.5 V when using a high-speed checker single comparator.
c. The functional tests shall be performed with V_{CC} = 4.5 and V_{CC} = 5.5 V.

4/ GALPAT. This program will test all bits in the array, the addressing and interaction between bits for ac performance t_{AVQV}, t_{SVQV}, t_{SCQV}, t_{WZQV}, and t_{WHQV}, the memory is initialized by writing a field of "H" and then a field of "L".

Description:
1. Write an "H" in word 0.
2. Word 0 is read.
3. Word 1 is read.
4. Word 0 is read
5. Word 2 is read.
6. Word 0 is read.
7. The reading procedure continues back and forth between word 0 and the next higher numbered word until word 1024 is reached, then increments to the next word and reads back and forth as in steps 1 through 7 and shall include all words.
8. Pass execution time = $(n^2 + n)$ x cycle time. n = 1024.
9. The GALPAT tests shall be performed with V_{CC} = 4.5 and 5.5 V.

5/ The outputs shall be loaded per load A of figure 5.

6/ Galloping Galwresh (with row column ping pong read GGII)
The Galloping Galwresh (GG) is started by first writing a field of zeros and then a field of ones into the memory under test (MUT). The following sequence is then performed.

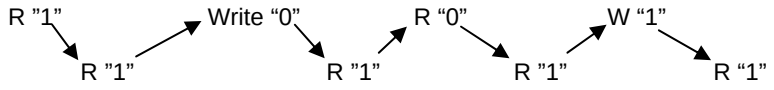

The background bits are read in ping-pong fashion in the Row/Column of the test bit. The sequence is repeated for the next test bit (Y advancing X) until the test bit reaches Xmax Ymax. The inverse pattern is then performed with V_{CC} = 4.5 and 5.5 V.

7/ For device type 05 and 06, t_{WHAC} and t_{AVWL} = 10 ns.

4.4.3 Group C inspection. Group C inspection shall be in accordance with table IV of MIL-PRF-38535 and as follows:

a. End-point electrical parameters shall be as specified in table II herein.

b. The steady-state life test duration, test condition, and test temperature, or approved alternatives shall be as specified in the device manufacturer's QM plan in accordance with MIL-PRF-38535. The burn-in test circuit shall be maintained under document control by the device manufacturer's Technology Review Board (TRB) in accordance with MIL-PRF-38535 and shall be made available to the acquiring or preparing activity upon request. The test circuit shall specify the inputs, outputs, biases, and power dissipation, as applicable, in accordance with the intent specified in test method 1005 of MIL-STD-883.

4.4.4 Group D inspection. Group D inspection shall be in accordance with table V of MIL-PRF-38535. End-point electrical parameters shall be as specified in table II herein.

4.5 Methods of inspection. Methods of inspection shall be as specified and as follows:

4.5.1 Voltage and current. All voltages given are referenced to the microcircuit ground terminal. Currents given are conventional and positive when flowing into the referenced terminal.

5. PACKAGING

5.1 Packaging requirements. For acquisition purposes, the packaging requirements shall be as specified in the contract or order (see 6.2). When packaging of materiel is to be performed by DoD or in-house contractor personnel, these personnel need to contact the responsible packaging activity to ascertain packaging requirements. Packaging requirements are maintained by the Inventory Control Point's packaging activity within the Military Service or Defense Agency, or within the military service's system command. Packaging data retrieval is available from the managing Military Department's or Defense Agency's automated packaging files, CD-ROM products, or by contacting the responsible packaging activity.

6. NOTES

(This section contains information of a general or explanatory nature which may be helpful, but is not mandatory.)

6.1 Intended use. Microcircuits conforming to this specification are intended for logistic support of existing equipment.

6.2 Acquisition requirements. Acquisition documents should specify the following:

a. Title, number, and date of the specification.

b. PIN and compliance identifier, if applicable (see 1.2).

c. Requirements for delivery of one copy of the conformance inspection data pertinent to the device inspection lot to be supplied with each shipment by the device manufacturer, if applicable.

d. Requirements for certificate of compliance, if applicable.

e. Requirements for notification of change of product or process to contracting activity in addition to notification to the qualifying activity, if applicable.

f. Requirements for failure analysis (including required test condition of method 5003 of MIL-STD-883), corrective action, and reporting of results, if applicable.

g. Requirements for product assurance options.

h. Requirements for special carriers, lead lengths, or lead forming, if applicable. These requirements shall not affect the part number. Unless otherwise specified, these requirements will not apply to direct purchase by or direct shipment to the Government.

i. Requirements for "JAN" marking.

j. Packaging Requirements (see 5.1)

6.3 Qualification. With respect to products requiring qualification, awards will be made only for products which are, at the time of award of contract, qualified for inclusion in Qualified Manufacturers List QML-38535 whether or not such products have actually been so listed by that date. The attention of the contractors is called to these requirements, and manufacturers are urged to arrange to have the products that they propose to offer to the Federal Government tested for qualification in order that they may be eligible to be awarded contracts or purchase orders for the products covered by this specification. Information pertaining to qualification of products may be obtained from DSCC-VQ, 3990 E. Broad Street, Columbus, Ohio 43218-3990.

6.4 Superseding information. The requirements of MIL-M-38510 have been superseded to take advantage of the available Qualified Manufacturer Listing (QML) system provided by MIL-PRF-38535. Previous references to MIL-M-38510 in this document have been replaced by appropriate references to MIL-PRF-38535. All technical requirements now consist of this specification and MIL-PRF-38535. The MIL-M-38510 specification sheet number and PIN have been retained to avoid adversely impacting existing government logistics systems and contractor's parts lists.

6.5 Abbreviations, symbols, and definitions. The abbreviations, symbols, and definitions used herein are defined in MIL-PRF-38535, MIL-HDBK-1331, and as follows:

GND ..... Electrical ground (common terminal)
I_{OHZ} ..... High impedance (off state) output high current
I_{OLZ} ..... High impedance (off state) output low current
V_{IC} ..... Input clamp voltage
V_{IN} ..... Voltage level at an input terminal
t_{AVQV} ..... Address access time
t_{SLQV} ..... Chip select time
t_{WLWH} ..... Write pulse width
t_{SCQV} ..... Chip select output disable time
t_{WHAC} ..... Address hold time after write
t_{DCWL} ..... Data setup time prior to write
t_{WHSC} ..... Chip select hold time after write
t_{WHQV} ..... Write recovery time
t_{WLQV} ..... Write setup time
t_{AVWL} ..... Address setup time prior to write
t_{SVWL} ..... Chip select setup time prior to write
t_{WHOC} ..... Data hold time after write
t_{SCQZ} ..... Chip select disable time to high impedance
t_{WLQZ} ..... Write enable time to high impedance
t_{ELQV} ..... Output select time
t_{EHQZ} ..... Output select disable time to high Z
t_{EHQV} ..... Output select disable time

6.4.1 Timing parameter abbreviations. All timing abbreviations use upper case characters with no subscripts. The initial character is always T and is followed by four descriptors. These characters specify two signal points arranged in a “from-to” sequence that define a timing interval. The two descriptors for each signal point specify the signal name and the signal transitions. Thus the format is:

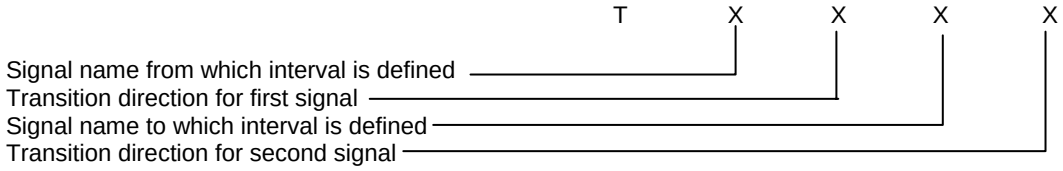

a. Signal definitions:
A = Address
D = Data in
Q = Data out
W = Write enable
E = Chip enable
S = Chip select
G = Output enable
C = Change

b. Transition definitions:
H = Transition to high
L = Transition to low
V = Transition to valid
X = Transition to invalid or don’t care
Z = Transition to off (high impedance)

6.6 Logistic support. Lead materials and finishes (see 3.4) are interchangeable. Unless otherwise specified, microcircuits acquired for Government logistic support will be acquired to device class B (see 1.2.2), lead material and finish A (see 3.4). Longer length leads and lead forming should not affect the part number

6.7 Substitutability. The cross-reference information below is presented for the convenience of users. Microcircuits covered by this specification will functionally replace the listed generic-industry type. Generic-industry microcircuit types may not have equivalent operational performance characteristics across military temperature ranges or reliability factors equivalent to MIL-M-38510 device types and may have slight physical variations in relation to case size. The presence of this information should not be deemed as permitting substitution of generic-industry types for MIL-M-38510 types or as a waiver of any of the provisions of MIL-PRF-38535.

Military device type	Generic-industry Type
01	93415
02	93425
03	93L415
04	93L425
05	93415
06	93425
07	93415
08	93425A
09	93412
10	93422
11	93L412
12	93L422
13	93L425A
14	93422A
15	93L422A

6.8 Change from previous issue. Marginal notations are not used in this revision to identify changes with respect to the previous issue, due to the extensiveness of the changes.

Custodians:
Army - CR
Navy - EC
Air Force - 11
DLA - CC

Preparing activity:
DLA - CC

Review activities:
Army – SM, MI
Navy - AS, CG, MC, SH TD
Air Force – 03, 19, 99

(Project 5962-2117)

NOTE: The activities listed above were interested in this document as of the date of this document. Since organization and responsibilities can change, you should verify the currency of the information above using the ASSIST Online database at http://assist.daps.dla.mil.